PolamRem

LIGHTING TECHNOLOGIES

KATALOG OPRAW OŚWIETLENIOWYCH

Zastosowania Morskie

LUMINAIRES CATALOGUE

Sea Application

PolamRem

Katalog opraw oświetleniowych

Luminaires Catalogue

POLAM-REM S.A.

Short History of Company

Realizations

Floodlights 1.01 - 1.14

Technical and Outdoor Luminaires 2.01 - 2.16

Wall and Ceiling Luminaires, recessed 3.01 - 3.18

Wall and Ceiling Luminaires, surface 4.01 - 4.17

Emergency Lighting 5.01 - 5.08

Downlights 6.01 - 6.17

Office and Workplace Luminaires 7.01 - 7.05

Decorative Table 8.01 - 8.07

Outdoor Luminaires 9.01 - 9.05

PolamRem

POLAM-REM S.A. 80-531 Gdańsk ul.Sucha 25
tel. +48(0-58) 520-74-00 fax +48(0-58) 343-26-29
www.polam-rem.com.pl; polamrem@polam-rem.com.pl

Technical modification reserved without prior notice

POLAM-REM S.A.

Floodlights

STP 76 - 1070	1.01 - 1.02
STP 76 - 1400	1.03 - 1.04
STP 76 - 2400	1.05 - 1.06
VGP 76	1.07
STP 76 - 0200	1.08 - 1.09
STP 76 - 0500	1.10 - 1.11
STP 76 - 1000	1.12 - 1.13
Diagrams Electrical Connection	1.14

PolamRem

POLAM-REM S.A. 80-531 Gdańsk ul.Sucha 25
tel. +48(0-58) 520-74-00 fax +48(0-58) 343-26-29
www.polam-rem.com.pl; polamrem@polam-rem.com.pl

Technical modification reserved without prior notice

POLAM-REM S.A.

Floodlight with incorporated ballast, 1x70W for HPS

STP 76 - 1070

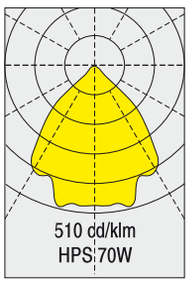

IP 67

230V 50Hz

230V 60Hz

E 27

Type		Light source	Light source power	Lampholder type	Weight
230V / 50Hz	230V / 60Hz				
STP 76 - 1070	STP 76 - 1071	sodium lamp	70 W	E 27	6,9 kg

Application
decks, holds, industrial areas, etc.
Approvals
according to the rules of relevant classification societies, additional IEC
Housing
stainless steel seamless deep drawn, powder coated white

Diffuser
safety glass
Reflector
aluminium anodized
Lamps (not included)
high pressure sodium (HPS) lamp,
Electric
230V, flexible wiring, high temperature resistant

Cable entry
junction box, 1 cable glands brass, M 24x1.5, with earthing insert
Mounting
adjustable bracket, stainless steel, 4 mounting holes, ø10 mm and ø14 mm
Electrical connection
see finish section

1.01

[mm]

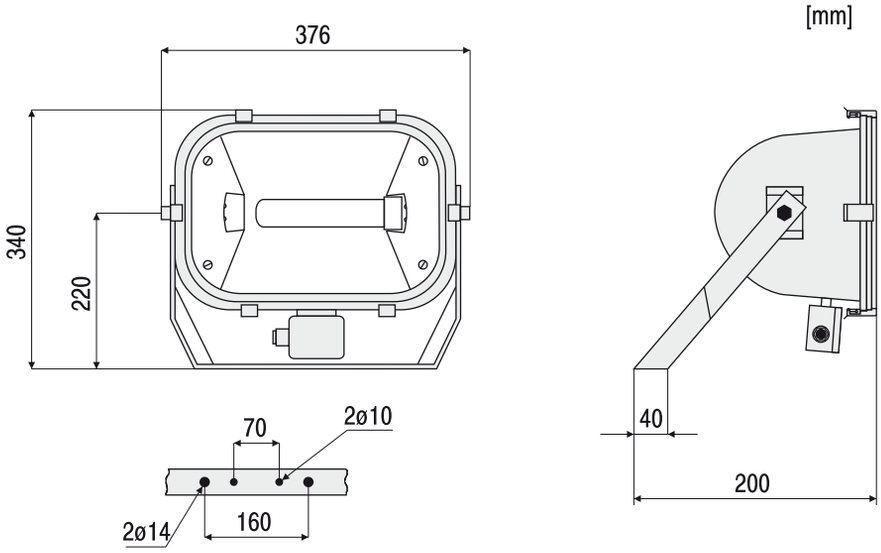

OPTIONS

SC-Glands for screen cable

PolamRem
POLAM-REM S.A. 80-531 Gdańsk ul.Sucha 25
tel. +48(0-58) 520-74-00 fax +48(0-58) 343-26-29
www.polam-rem.com.pl; polamrem@polam-rem.com.pl

Technical modification reserved without prior notice

Floodlight with incorporated ballast, 1x70W for HPS

POLAM-REM S.A.

Spare parts for floodlight STP 76-1070

No.	Spare parts	Part-no.
1	Glass mounting kit	101 00 76107
2	Reflector	201 00 76107
3	Lampholder E 27	011 00 76107
4	Ignitor	021 00 76107
5	Ballast	031 00 76107
6	Stainless steel clamps /cpl./	306 00 76107
7	Bracket stainless steel	401 00 76107
8	Junction box	501 00 76107

PolamRem
POLAM-REM S.A. 80-531 Gdańsk ul.Sucha 25
tel. +48(0-58) 520-74-00 fax +48(0-58) 343-26-29
www.polam-rem.com.pl; polamrem@polam-rem.com.pl

Technical modification reserved without prior notice

POLAM-REM S.A.

Floodlight, max 1x400W HPS/MH

STP 76 - 1400

IP 67

E 40

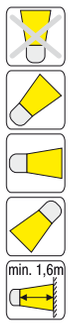

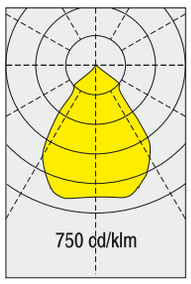

Type	Light source	Light source power	Lampholder type	Weight
STP 76 - 1400	sodium or metal-halide lamp	1 x 250 W or 1 x 400 W	E 40	7,7 kg

Application
decks, holds, industrial areas, etc.
Approvals
according to the rules of relevant classification societies, additional IEC
Housing
stainless steel seamless deep drawn, powder coated white
Diffuser
safety glass
Reflector
aluminium anodized

Lamps (not included)
high pressure (HPS) sodium lamp, metal halide (MH) lamp 250W/400W
Electric
230V, flexible wiring, high temperature resistant
Cable entry
junction box, 1 cable glands brass, M 24x1.5, with earthing insert

Mounting
adjustable bracket, stainless steel, 4 mounting holes, ø10 mm and ø14 mm
Electrical connection
see finish section
Remark
ballast unit VGP 76 - . . . . has to be ordered separately

1.03

[mm]

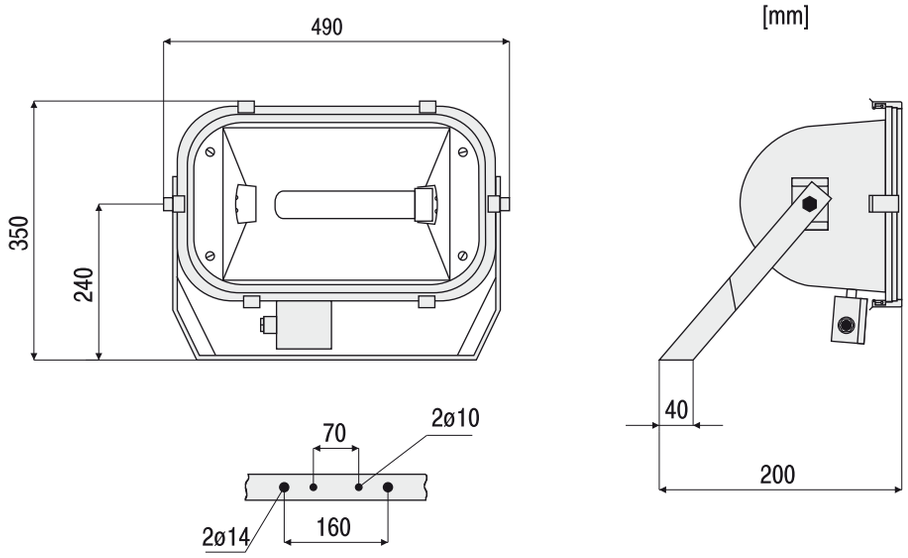

OPTIONS

Narrow Beam Reflektor

SC-Glands for screen cable

PolamRem

POLAM-REM S.A. 80-531 Gdańsk ul.Sucha 25
tel. +48(0-58) 520-74-00 fax +48(0-58) 343-26-29
www.polam-rem.com.pl; polamrem@polam-rem.com.pl

Technical modification reserved without prior notice

POLAM-REM S.A.

Spare parts for floodlight STP 76-1400

No.	Spare parts	Part-no.
1	Glass mounting kit	101 00 76140
2a	Reflector wide beam	201 00 76140
2b	Reflector narrow beam	211 00 76140
3	Lampholder E 40	011 00 76140
4	Ignitor	021 00 76140
5	Stainless steel clamps /cpl./	306 00 76140
6	Bracket stainless steel	401 00 76140
7	Junction box	501 00 76140

PolamRem
POLAM-REM S.A. 80-531 Gdańsk ul.Sucha 25
tel. +48(0-58) 520-74-00 fax +48(0-58) 343-26-29
www.polam-rem.com.pl; polamrem@polam-rem.com.pl

Technical modification reserved without prior notice

POLAM-REM S.A.

Floodlight, max 2x400W HPS/MH

STP 76 - 2400

IP 67

E 40

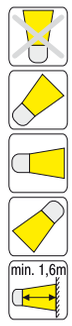

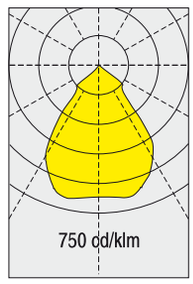

Type	Light source	Light source power	Lampholder type	Weight
STP 76 - 2400	sodium or metal-halide lamp	2 x 250 W or 2 x 400 W	E 40	11,8 kg

Application
decks, holds, industrial areas, etc.
Approvals
according to the rules of relevant classification societies, additional IEC
Housing
stainless steel seamless deep drawn, powder coated white

Diffuser
safety glass
Reflector
aluminium anodized
Lamps (not included)
high pressure sodium (HPS) lamp, metal halide (MH) lamp 250W/400W
Electric
230V, flexible wiring, high temperature resistant

Cable entry
junction box, 2 cable glands brass, M24x1.5, with earthing insert
Mounting
adjustable bracket, stainless steel, 4 mounting holes, ø14 mm
Electrical connection
see finish section
Remark
ballast unit VGP 76 - . . . . has to be ordered separately

1.05

[mm]

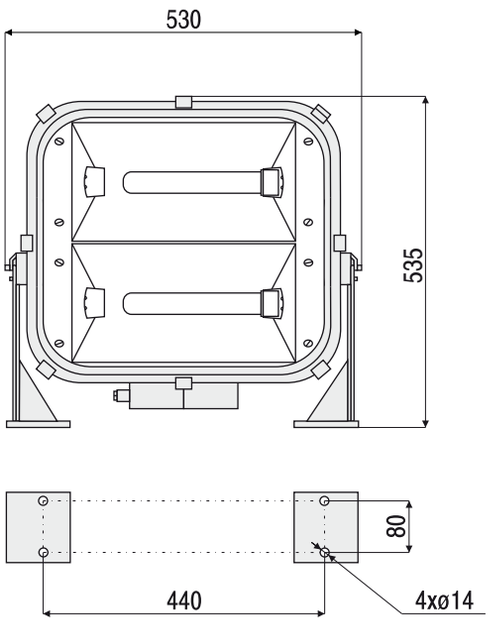

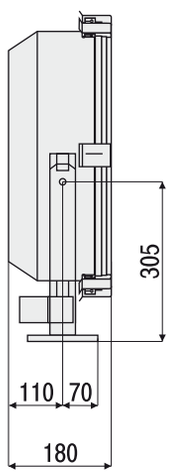

OPTIONS

SC-Glands for screen cable

PolamRem

POLAM-REM S.A. 80-531 Gdańsk ul.Sucha 25
tel. +48(0-58) 520-74-00 fax +48(0-58) 343-26-29
www.polam-rem.com.pl; polamrem@polam-rem.com.pl

Technical modification reserved without prior notice

Spare parts for floodlight STP 76-2400

No.	Spare parts	Part-no.
1	Glass mounting kit	101 00 76240
2	Reflector wide beam	201 00 76240
3	Lampholder E 40 /2 pcs./	012 00 76240
4	Ignitor /2 pcs./	022 00 76240
5	Stainless steel clamps /cpl./	308 00 76240
6	Bracket stainless steel	402 00 76240
7	Junction box /2 pcs./	502 00 76240

PolamRem

POLAM-REM S.A. 80-531 Gdańsk ul.Sucha 25
tel. +48(0-58) 520-74-00 fax +48(0-58) 343-26-29
www.polam-rem.com.pl; polamrem@polam-rem.com.pl

Technical modification reserved without prior notice

POLAM-REM S.A.

Ballast Unit for HPS/MH Floodlight 1x250W/1x400W/2x250W/2x400W

VGP 76

IP 67

230V-250V 50Hz

230V-250V 60Hz

Type		Light source	Light source power	Weight
230V - 250V / 50Hz	230V - 250V / 60Hz			
VGP 76 - 1250	VGP 76 - 1251	sodium or metal-halide lamp	1 x 250 W	10,6 kg
VGP 76 - 1400	VGP 76 - 1401		1 x 400 W	10,8 kg
VGP 76 - 2250	VGP 76 - 2251		2 x 250 W	18,4 kg
VGP 76 - 2400	VGP 76 - 2401		2 x400 W	19,4 kg

Application
decks and holds, industrial areas

Approvals
according to the rules of relevant classification societies, additional IEC

Housing
stainless steel, powder coated white

Electric
flexible wiring, heat resistant up to +105°C,

Cable entry
max. 4 cable glands, brass, M 24x1.5, with earthing insert

Mounting
4 mounting holes, ø10mm

Electrical connection
see finish section

Remarks
floodlight has to be ordered separately

1.07

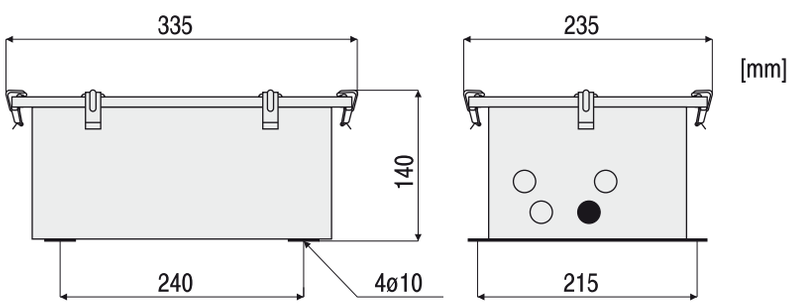

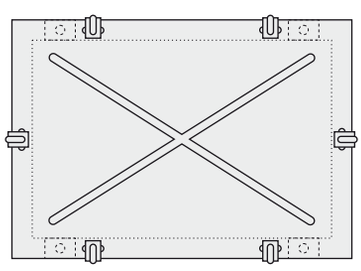

OPTIONS

SC-Glands for screen cable

PolamRem

POLAM-REM S.A. 80-531 Gdańsk ul.Sucha 25
tel. +48(0-58) 520-74-00 fax +48(0-58) 343-26-29
www.polam-rem.com.pl; polamrem@polam-rem.com.pl

Technical modification reserved without prior notice

STP 76 - 0200 Floodlight for halogen lamps max 1x200W

POLAM-REM S.A.

IP 67

max. 240V

R7s

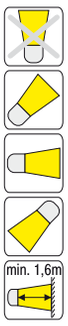

Type	Supply voltage	Light source	Light source power	Lampholder type	Weight
STP 76 - 0200	220 -240 V AC / DC	halogen lamp	max 200 W /114,2 mm/	R 7s	3,3 kg

Application
decks, holds, industrial areas, etc.
Approvals
according to the rules of relevant classification societies, additional IEC
Housing
stainless steel seamless deep drawn, powder coated white

Diffuser
safety glass
Reflector
aluminium anodized
Lamps (not included)
halogen lamp 200W, 114.2mm
Electric
230V, flexible wiring, high temperature resistant

Cable entry
junction box, 1 cable
gland brass, M24x1.5 with earthing insert
Mounting
adjustable bracket, stainless steel,
2 mounting holes, ø 14 mm
Electrical connection
see finish section

1.08

[mm]

OPTIONS

24V

SC-Glands for screen cable

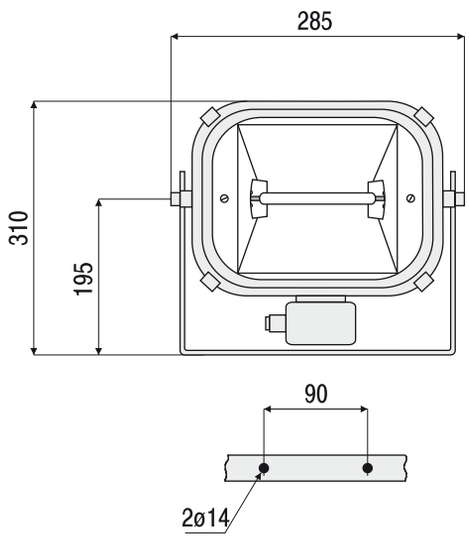

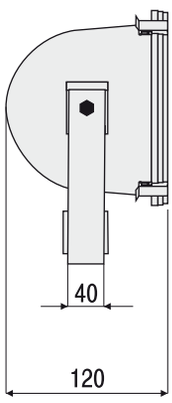

PolamRem

POLAM-REM S.A. 80-531 Gdańsk ul.Sucha 25
tel. +48(0-58) 520-74-00 fax +48(0-58) 343-26-29
www.polam-rem.com.pl; polamrem@polam-rem.com.pl

Technical modification reserved without prior notice

Spare parts for floodlight STP 76-0200

No.	Spare parts	Part-no.
1	Glass mounting kit	101 00 76020
2a	Reflector /230V/	201 00 76020
2b	Reflector /24V/	211 00 76020
3	Lampholder R7s	011 00 76020
4	Stainless steel clamps /cpl./	304 00 76020
5	Bracket stainless steel	401 00 76020
6	Junction box	501 00 76020

PolamRem

POLAM-REM S.A. 80-531 Gdańsk ul.Sucha 25
tel. +48(0-58) 520-74-00 fax +48(0-58) 343-26-29
www.polam-rem.com.pl; polamrem@polam-rem.com.pl

Technical modification reserved without prior notice

STP 76 - 0500 Floodlight for halogen lamps max 1x500W

POLAM-REM S.A.

IP 67

max. 240V

R7s

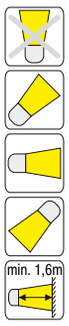

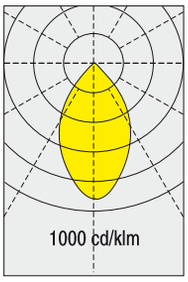

Type	Supply voltage	Light source	Light source power	Lampholder type	Weight
STP 76 - 0500	220 -240 V AC / DC	halogen lamp	max 500 W /114,2 mm/	R 7s	5,3 kg

Application
decks, holds, industrial areas, etc.
Approvals
according to the rules of relevant classification societies, additional IEC
Housing
stainless steel seamless deep drawn, powder coated white

Diffuser
safety glass
Reflector
aluminium anodized
Lamps (not included)
halogen lamp 200W, 300W, 500W, 114.2mm
Electric
230V, flexible wiring, high temperature resistant

Cable entry
junction box, 1 cable
gland brass, M24x1.5 with earthing insert
Mounting
adjustable bracket, stainless steel,
4 mounting holes, ø 10 mm and ø 14 mm
Electrical connection
see finish section

1.10

OPTIONS

Narrow Beam Reflektor

SC-Glands for screen cable

[mm]

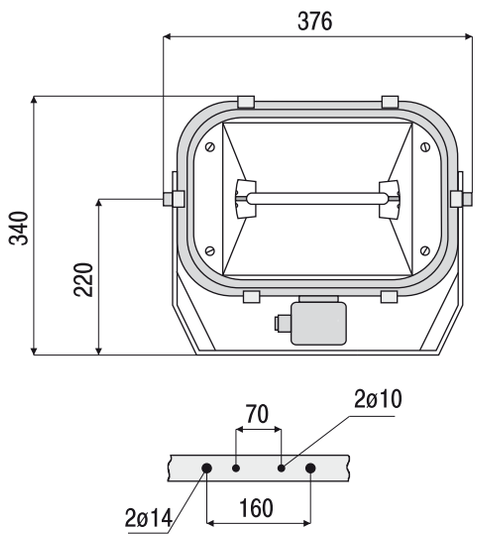

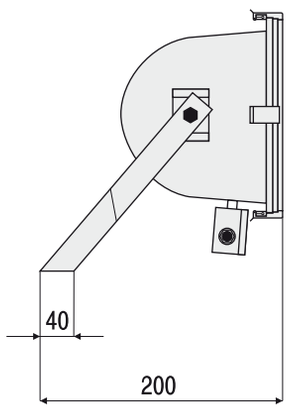

PolamRem

POLAM-REM S.A. 80-531 Gdańsk ul.Sucha 25
tel. +48(0-58) 520-74-00 fax +48(0-58) 343-26-29
www.polam-rem.com.pl; polamrem@polam-rem.com.pl

Technical modification reserved without prior notice

Spare parts for floodlight STP 76-0500

No.	Spare parts	Part-no.
1	Glass mounting kit	101 00 76050
2a	Reflector wide beam	201 00 76050
2b	Reflector narrow beam	211 00 76050
3	Lampholder R7s	011 00 76050
4	Stainless steel clamps /cpl./	306 00 76050
5	Bracket stainless steel	401 00 76050
6	Junction box	501 00 76050

PolamRem

POLAM-REM S.A. 80-531 Gdańsk ul.Sucha 25
tel. +48(0-58) 520-74-00 fax +48(0-58) 343-26-29
www.polam-rem.com.pl; polamrem@polam-rem.com.pl

Technical modification reserved without prior notice

STP 76 - 1000 Floodlight for halogen lamps max 1x1000W

POLAM-REM S.A.

IP 67

max. 240V

R7s

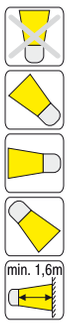

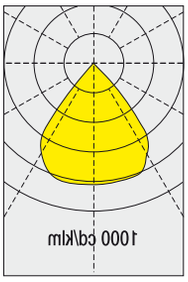

Type	Supply voltage	Light source	Light source power	Lampholder type	Weight
STP 76 - 1000	220 -240 V AC / DC	halogen lamp	max 1000 W /185,7 mm/	R 7s	7,6 kg

Application
decks, holds, industrial areas, etc.
Approvals
according to the rules of relevant classification societies, additional IEC
Housing
stainless steel seamless
deep drawn, powder coated white

Diffuser
safety glass
Reflector
aluminium anodized
Lamps (not included)
halogen lamp 750W, 1000W, 185.7 mm
Electric
230V, flexible wiring,
high temperature resistant

Cable entry
junction box, 1 cable gland brass, M24x1.5 with earthing insert
Mounting
adjustable bracket, stainless steel,
4 mounting holes ø 10 mm and ø 14 mm
Electrical connection
see finish section

1.12

[mm]

OPTIONS

Narrow Beam Reflektor

E 40

SC-Glands for screen cable

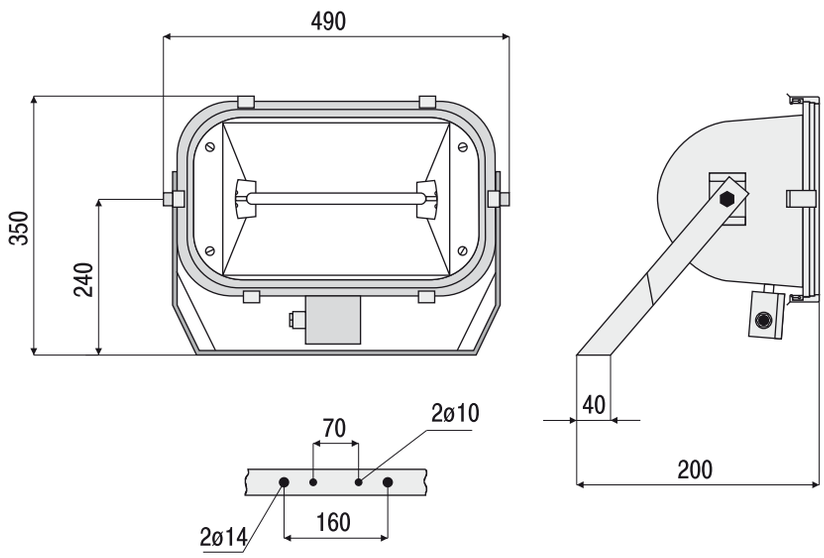

PolamRem

POLAM-REM S.A. 80-531 Gdańsk ul.Sucha 25
tel. +48(0-58) 520-74-00 fax +48(0-58) 343-26-29
www.polam-rem.com.pl; polamrem@polam-rem.com.pl

Technical modification reserved without prior notice

Spare parts for floodlight STP 76-1000

No.	Spare parts	Part-no.
1	Glass mounting kit	101 00 76100
2a	Reflector wide beam	201 00 76100
2b	Reflector narrow beam	211 00 76100
3	Lampholder R7s	011 00 76100
4	Stainless steel clamps /cpl./	306 00 76100
5	Bracket stainless steel	401 00 76100
6	Junction box	501 00 76100

PolamRem

POLAM-REM S.A. 80-531 Gdańsk ul.Sucha 25
tel. +48(0-58) 520-74-00 fax +48(0-58) 343-26-29
www.polam-rem.com.pl; polamrem@polam-rem.com.pl

Technical modification reserved without prior notice

Diagrams Electrical Connection for Floodlights

POLAM-REM S.A.

Electrical connection for Floodlight for halogen lamps

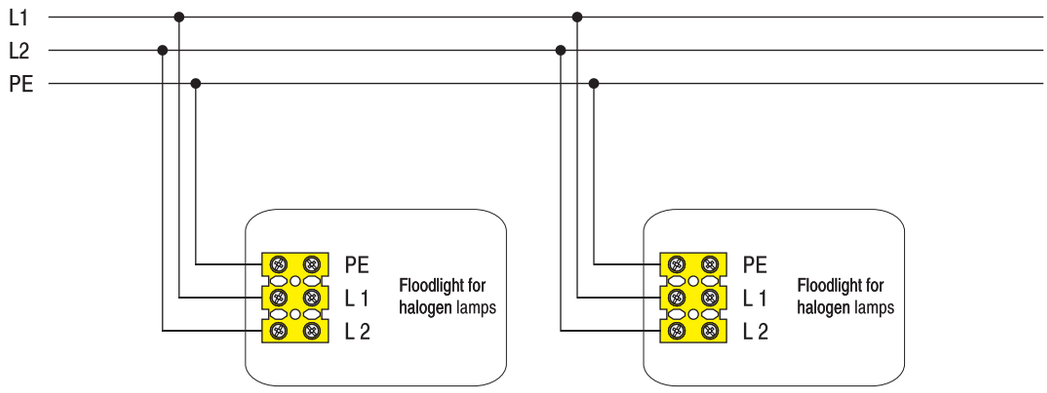

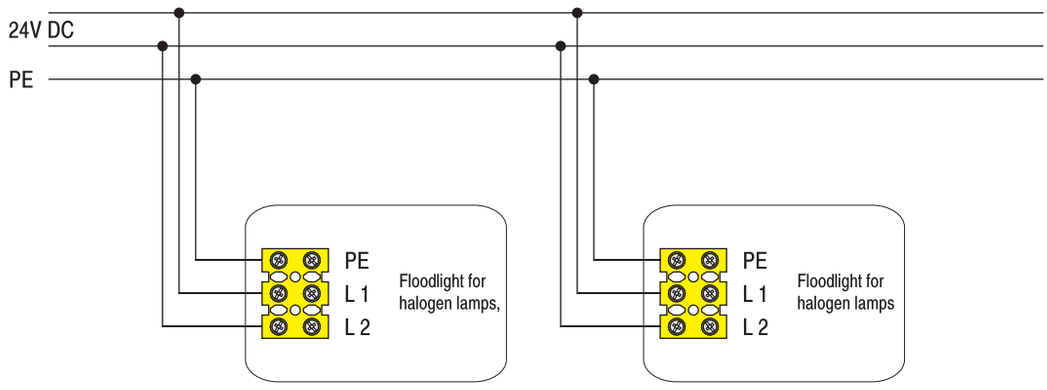

1.14

Electrical connection for Floodlight for HPS/MH lamps

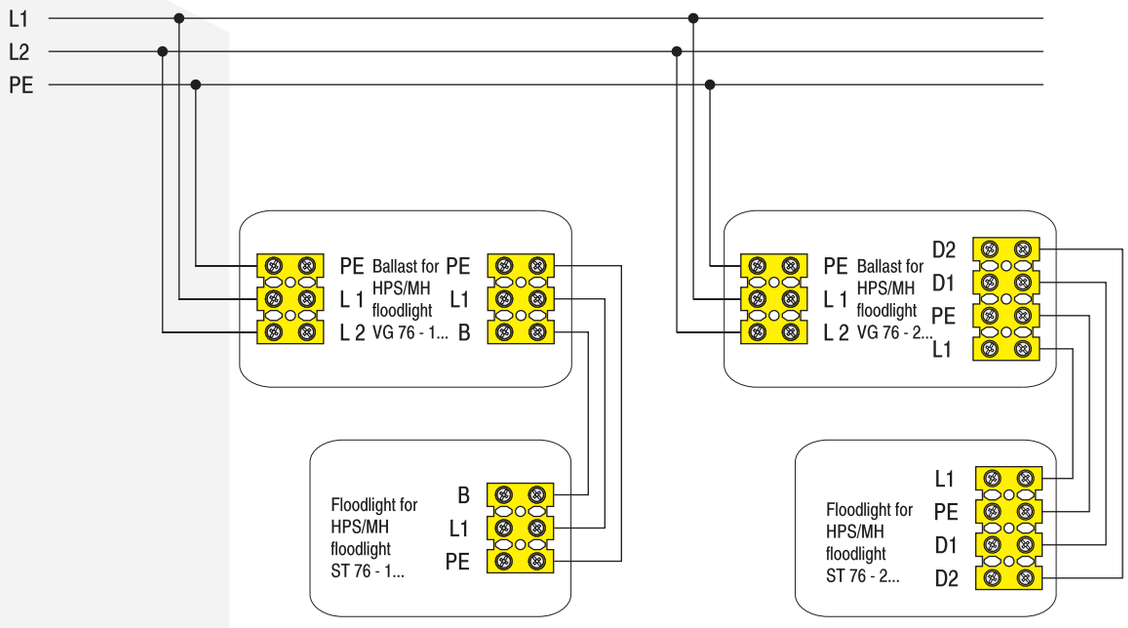

PolamRem

POLAM-REM S.A. 80-531 Gdańsk ul.Sucha 25
tel. +48(0-58) 520-74-00 fax +48(0-58) 343-26-29
www.polam-rem.com.pl; polamrem@polam-rem.com.pl

Technical modification reserved without prior notice

POLAM-REM S.A.

Technical and Outdoor Luminaires

TLP 54	2.01 - 2.04
TLP 67	2.05 - 2.07
TLP 67 MLED	2.08 - 2.10
TLP 53	2.11 - 2.13
KLP 61	2.14 - 2.15
TZP 44	2.16 - 2.17
KZP 61	2.18 - 2.19
EXP 03	2.20
EXP 83	2.21 - 2.22

PolamRem

POLAM-REM S.A. 80-531 Gdańsk ul.Sucha 25
tel. +48(0-58) 520-74-00 fax +48(0-58) 343-26-29
www.polam-rem.com.pl; polamrem@polam-rem.com.pl

Technical modification reserved without prior notice

TLP 54

Multipurpose luminaire, surface
1x18W/2x18W; 1x36W/2x36W

POLAM-REM S.A.

IP 55

220-240V AC/DC

G13

+40°C

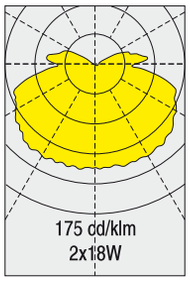

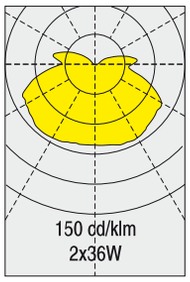

Type	Light source	Light source power / lamp base	Weight
TLP 54 Z-1187	fluorescent lamp	1x18W / G13	3,5 kg
TLP 54 Z-2187		2x18W / G13	4,0 kg
TLP 54 Z-1367		1x36W / G13	5,6 kg
TLP 54 Z-2367		2x36W / G13	6,2 kg

Application
Multipurpose luminaire for engine rooms, holds, storage yards, working spaces, industrial areas, etc.

Approvals
according to the rules of relevant classification societies, additional IEC

Housing
zinc coated steel, seamless deep drawn, powder coated white

Diffuser
polycarbonate, clear

Lamps (not included)
fluorescent lamp18W/36W

Electric
flexible wiring, heat resistant up to +105°C

Cable entry
max 4 cable glands, to be ordered separately

Mounting
See drawning B

Electrical connection
see finish section

2.01

OPTIONS

Electronic Ballast	220V-240V AC/DC	110V-240V AC/DC
Battery Backup System	220V-240V 50Hz-60Hz	3H
Electronic Ballast	24V DC	

Emergency Lampholder B15d

Emergency Lampholder E14

Outside Junction Box

[mm]

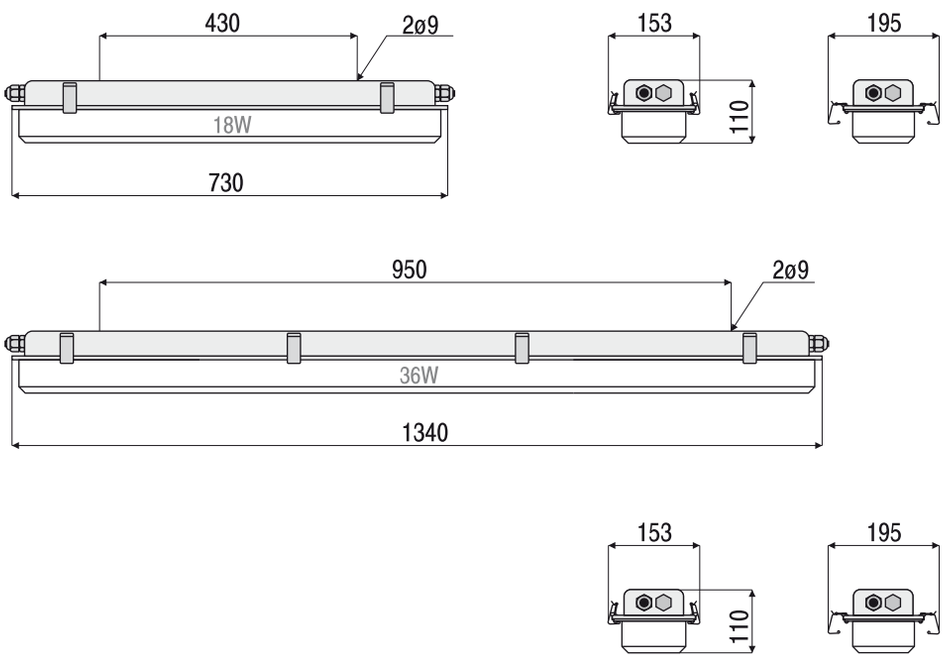

PolamRem

POLAM-REM S.A. 80-531 Gdańsk ul.Sucha 25
tel. +48(0-58) 520-74-00 fax +48(0-58) 343-26-29
www.polam-rem.com.pl; polamrem@polam-rem.com.pl

Technical modification reserved without prior notice

Order Specification

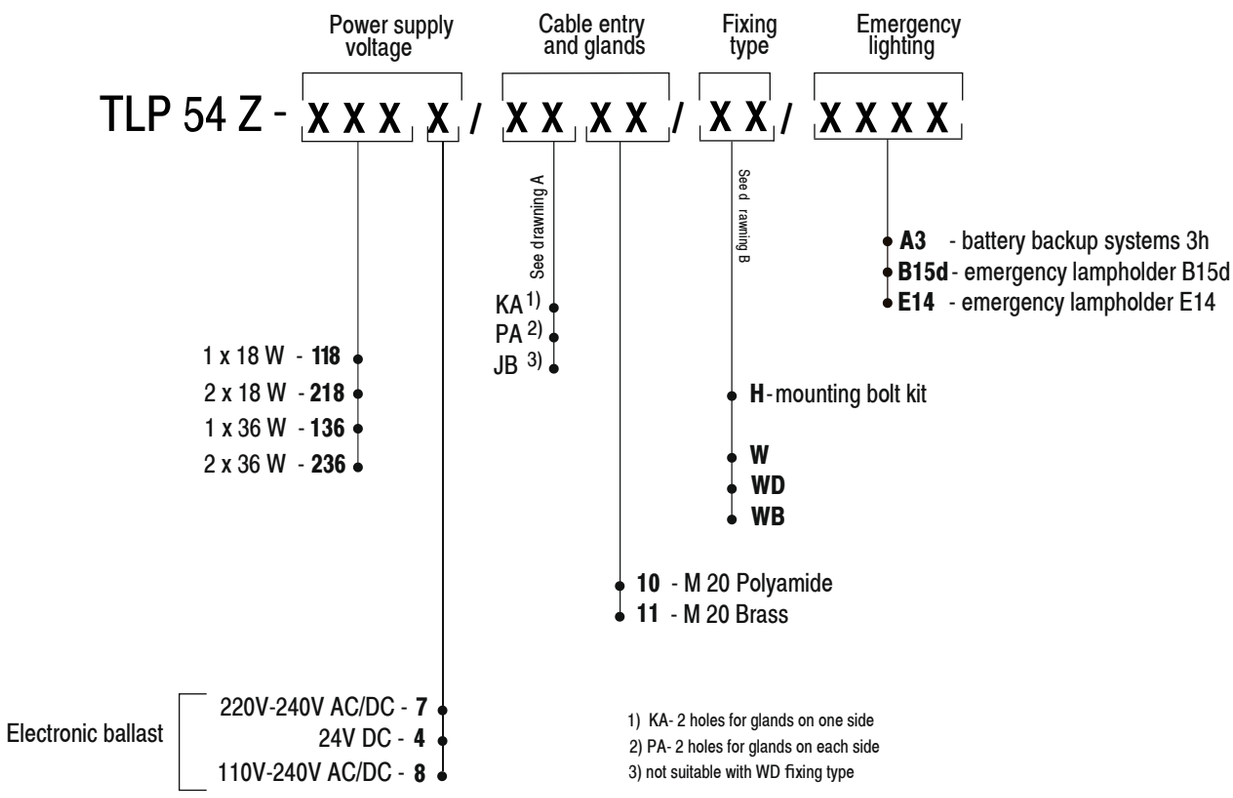

Example of type description

TLP 54Z - 2187/PA10/W light fitting for two fluorescent lamps 18W with socket G13; supply voltage 220-240V AC/DC; through wiring; fixing - two „W" brackets;

A. Cable entry

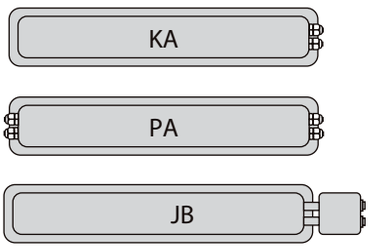

Luminaire is equipped with:
1) KA version - 2 glands and 1 blanking plug;
2) PA version - 4 glands and 2 blanking plugs;

:

M 20	
Polyamide	Brass
Cable dia. 6-12 /mm/	Cable dia. 8-14,5 /mm/
10	11

PolamRem

POLAM-REM S.A. 80-531 Gdańsk ul.Sucha 25
tel. +48(0-58) 520-74-00 fax +48(0-58) 343-26-29
www.polam-rem.eu; sekretariat@polam-rem.eu

Technical modification reserved without prior notice

TLP 54

Multipurpose luminaire, surface 1x18W/2x18W; 1x36W/2x36W

POLAM-REM S.A.

B. Fixing type

H

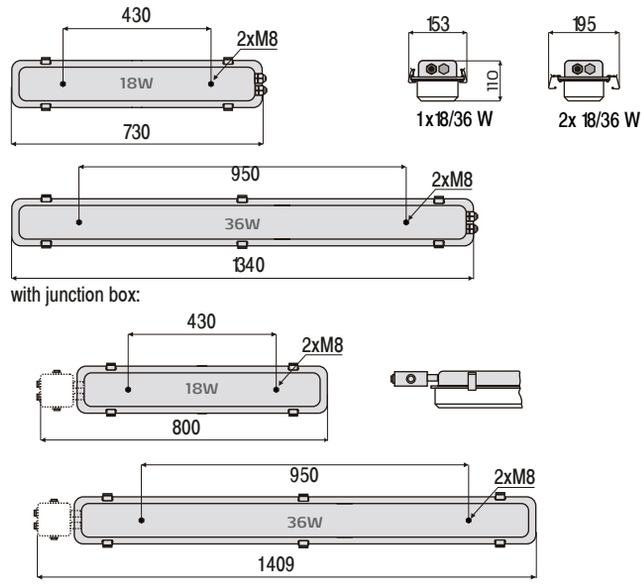

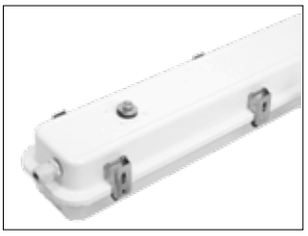

W

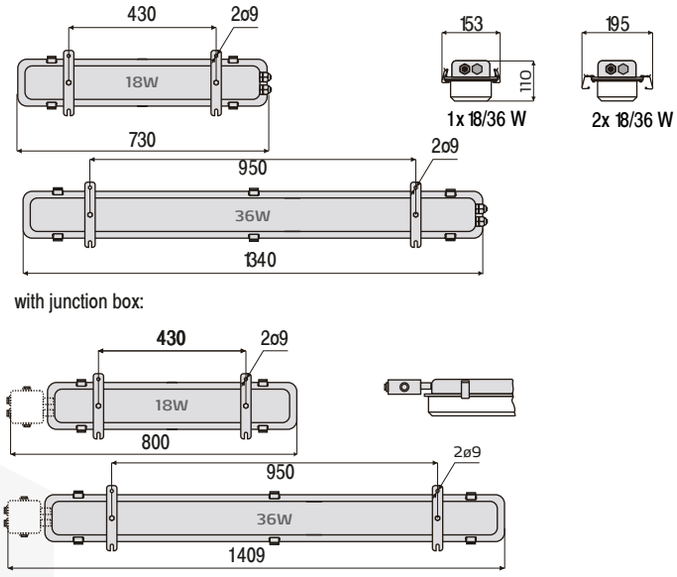

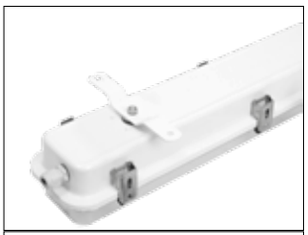

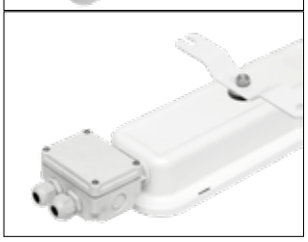

2.03

WD

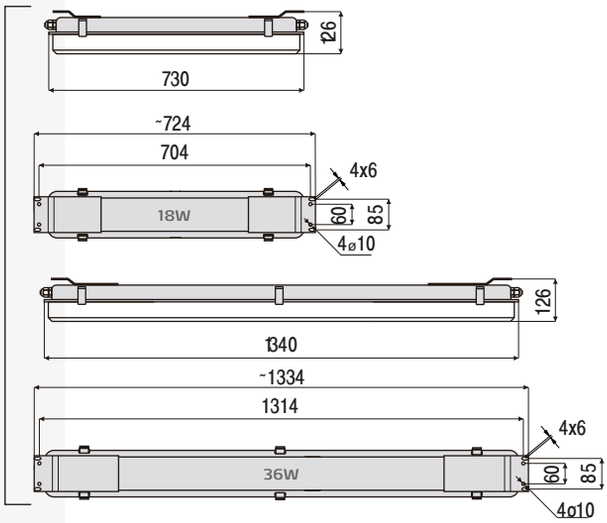

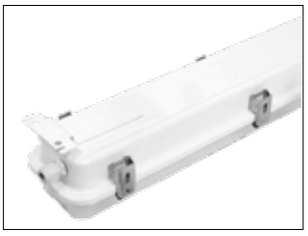

PolamRem

POLAM-REM S.A. 80-531 Gdańsk ul.Sucha 25
tel. +48(0-58) 520-74-00 fax +48(0-58) 343-26-29
www.polam-rem.com.pl; polamrem@polam-rem.com.pl

Technical modification reserved without prior notice

POLAM-REM S.A.

Multipurpose luminaire, surface 1x18W/2x18W; 1x36W/2x36W

TLP 54

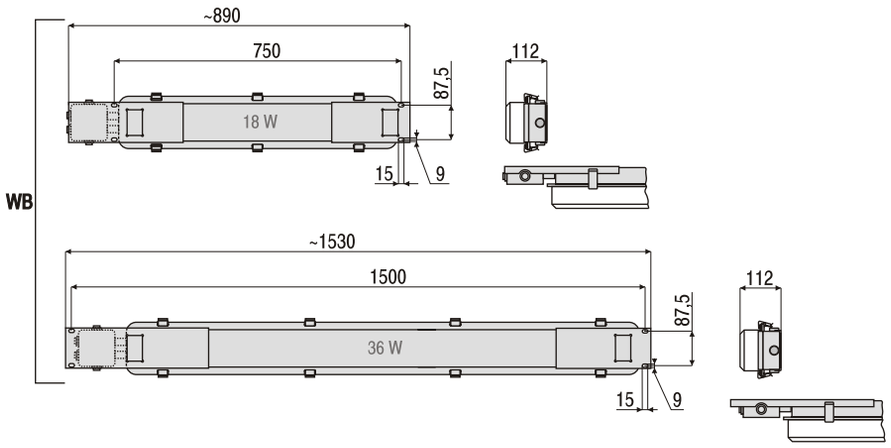

2.04

PolamRem
POLAM-REM S.A. 80-531 Gdańsk ul.Sucha 25
tel. +48(0-58) 520-74-00 fax +48(0-58) 343-26-29
www.polam-rem.com.pl; polamrem@polam-rem.com.pl

Technical modification reserved without prior notice

TLP 67

Watertight luminaire, surface
1x18W/2x18W; 1x36W/2x36W

POLAM-REM S.A.

IP 67

230V 50Hz

G13

+45°C

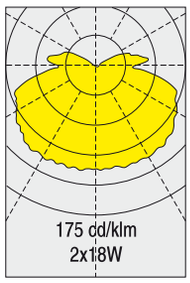

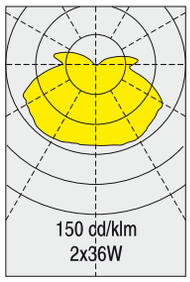

Type	Light source	Light source power / lamp base	Weight
TLP 67-1180	fluorescent lamp	1x18W / G13	3,5 kg
TLP 67-2180		2x18W / G13	4,0 kg
TLP 67-1360		1x36W / G13	5,6 kg
TLP 67-2360		2x36W / G13	6,2 kg

Application
Watertight luminaire for decks, engine rooms, holds, storage yards, working spaces, industrial areas, etc.
Approvals
according to the rules of relevant classification societies, additional IEC

Housing
stainless steel or zinc coated steel powder coated white
Diffuser
polycarbonate, clear
Lamps (not included)
fluorescent lamp18W/36W

Electric
flexible wiring, heat resistant up to +105°C
Cable entry
max 4 cable glands, to be ordered separately
Mounting
See drawning B
Electrical connection
see finish section

2.05

OPTIONS

230V 50Hz | 220V-230V 60Hz | 120V 60Hz

Electronic Ballast 24V DC | 240V 50Hz

Electronic Ballast 220V-240V AC/DC | 110V-240V AC/DC

Battery Backup System 220V-240V 50Hz-60Hz | 3h

Stainless Steel Housing | Zinc Coated Housing

Emergency Lampholder B15d | Emergency Lampholder E14

[mm]

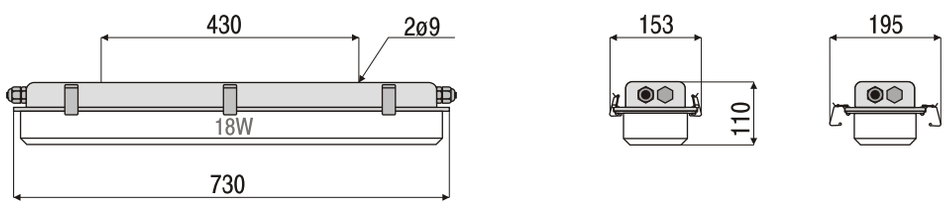

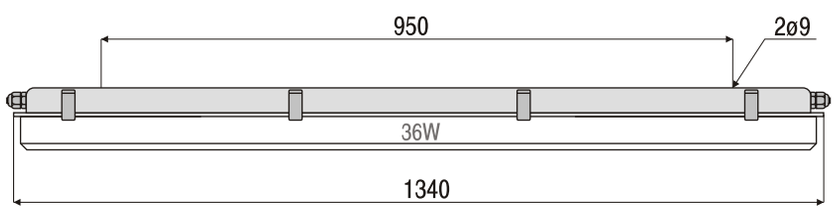

PolamRem
POLAM-REM S.A. 80-531 Gdańsk ul.Sucha 25
tel. +48(0-58) 520-74-00 fax +48(0-58) 343-26-29
www.polam-rem.eu; sekretariat@polam-rem.eu

Technical modification reserved without prior notice

Order Specification

TLP 67 X - X X X X / X X X X / X X / X X X X

Housing | Power supply voltage | Cable entry and glands | Fixing type | Emergency lighting

Housing
- stainless steel - **S**
- zinc coated steel - **Z**

Power supply voltage
- 1 x 18 W - **118**
- 2 x 18 W - **218**
- 1 x 36 W - **136**
- 2 x 36 W - **236**

Cable entry and glands (See drawning A)
- **K**
- **P**
- **KA**
- **PA**
- **PAK**

Fixing type (See drawning B)
- **H** - mounting bolt kit
- **W** - bracket welded for version „S” for „Z”
- **WD** - bracket welded to housing

Emergency lighting
- **A3** - battery backup system 3h
- **B15d** - emergency lampholder B15d
- **E14** - emergency lampholder E14

Power supply voltage
- Magnetic ballast:
  - 230V/50Hz - **0**
  - 220V-230V/60Hz - **1**
  - 120V/60Hz - **2**
  - 240V/50Hz - **3**
- Electronic ballast:
  - 24V DC - **4**
  - 220V-240V AC/DC - **7**
  - 110V-240V AC/DC - **8**

Cable entry and glands
- **10** - M 20 Polyamide
- **11** - M 20 Brass
- **13** - M 20 Brass Screen Cable
- **20** - M 25 Polyamide
- **21** - M 25 Brass
- **23** - M 25 Brass Screen Cable

2.06

Example of type description

TLP 67S - 2180/PA10/W - light fitting for two fluorescent lamp 18 W with socket 13; supply voltage 230V/50Hz; through wiring 4 glands; fixing - two „w” brackets; housing of stainless steel

A. Cable entry

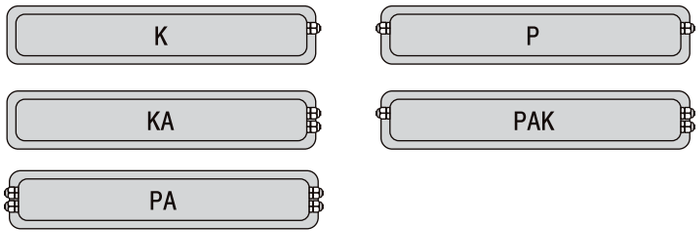

M 20			M 25		
Polyamide	Brass	Brass SC	Polyamide	Brass	Brass SC
Cable dia. 6-12 /mm/	Cable dia. 8-14,5 /mm/	Cable dia. 7-12,5 /mm/	Cable dia. 11-17 /mm/	Cable dia. 9-17 /mm/	Cable dia. 9-17 /mm/
10	11	13	20	21	23

PolamRem

POLAM-REM S.A. 80-531 Gdańsk ul.Sucha 25
tel. +48(0-58) 520-74-00 fax +48(0-58) 343-26-29
www.polam-rem.eu; sekretariat@polam-rem.eu

Technical modification reserved without prior notice

Watertight luminaire, surface
1x18W/2x18W; 1x36W/2x36W

POLAM-REM S.A.

B. Fixing type

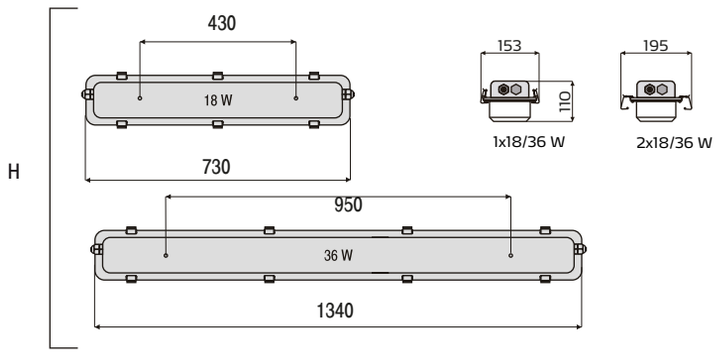

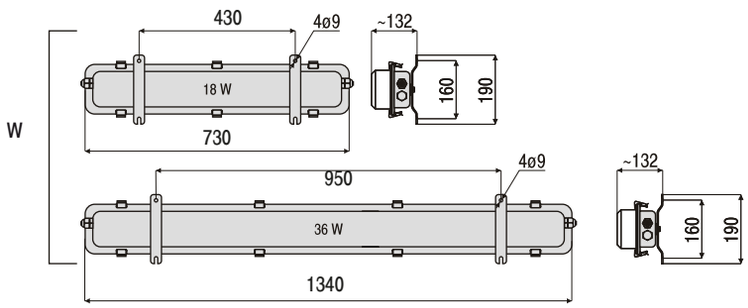

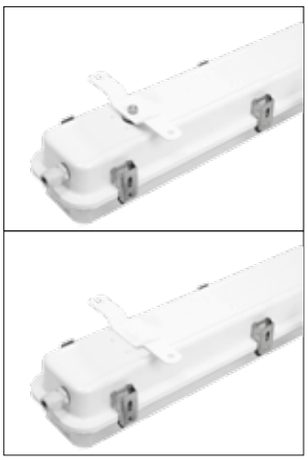

2.07

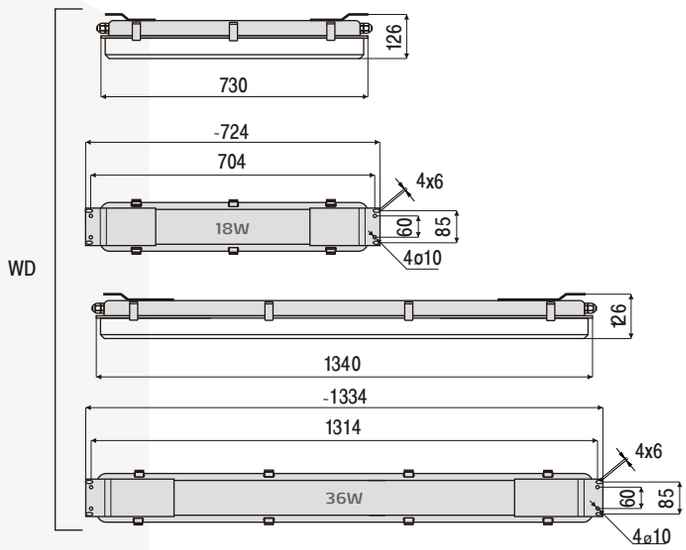

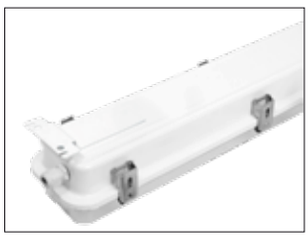

PolamRem
POLAM-REM S.A. 80-531 Gdańsk ul.Sucha 25
tel. +48(0-58) 520-74-00 fax +48(0-58) 343-26-29
www.polam-rem.com.pl; polamrem@polam-rem.com.pl

Technical modification reserved without prior notice

POLAM-REM S.A.

Watertight luminaire, surface
2x11W / 4x11W / 4x6W / 8x6W LED

TLP 67 MLED

IP 67

IP 66

LED

+45°C

220-240V AC/DC

Type	Wattage	Light source	Weight	Light flux	Equivalent
TLP 67-MLED220/211/...	2 x 11 W	LED panel	3,9 kg	2 x 1250 lm	2x14W (T5); 2x18W (T8)
TLP 67-MLED240/411/...	4 x 11 W	LED panel	4,2 kg	4 x 1250 lm	2x28W (T5); 2x36W (T8)
TLP 67-MLED220/406/...	4 x 6 W	LED panel	3,5 kg	4 x 770 lm	2x14W (T5); 2x18W (T8)
TLP 67-MLED240/806/...	8 x 6 W	LED panel	4,0 kg	8 x 770 lm	2x28W (T5); 2x36W (T8)

Application
Watertight luminaire for decks, engine rooms, holds, storage yards, working spaces, industrial areas, etc.
Approvals
according to the rules of relevant classification societies, additional IEC

Housing
stainless steel or zinc coated steel powder coated white
Diffuser
polycarbonate, clear

Electric
flexible wiring, heat resistant up to +105°C
Cable entry
max 4 cable glands, to be ordered separately
Mounting
See drawning B
Electrical connection
see finish section

2.08

[mm]

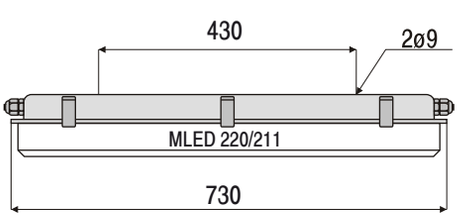

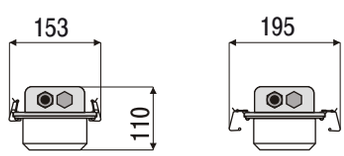

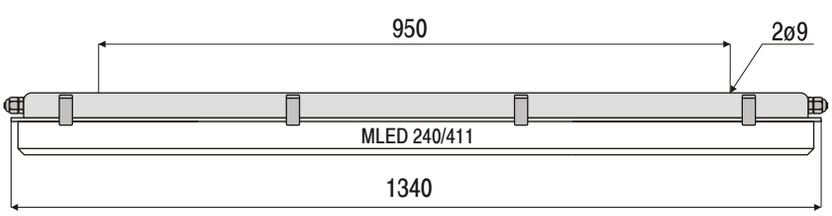

OPTIONS

110V-240V AC/DC

24V DC

Battery Backup System 3h

Stainless Steel Housing

Zinc Coated Housing

PolamRem

POLAM-REM S.A. 80-531 Gdañsk ul.Sucha 25
tel. +48(0-58) 520-74-00 fax +48(0-58) 343-26-29
www.polam-rem.eu; sekretariat@polam-rem.eu

Technical modification reserved without prior notice

TLP 67 MLED

Watertight luminaire, surface
2x11W / 4x11W LED

POLAM-REM S.A.

Order Specification

Housing | Power | Supply Voltage | Colour temp. | Cable entry and glands | Fixing type

TLP 67 X - MLED x x x/x x x / x / x x x / x x x x x x

- stainless steel - **S**
- zinc coated steel - **Z**

- 2 x 11 W - **220/211**
- 4 x 11 W - **240/411**
- 4 x 6 W *- **220/406**
- 8 x 6 W *- **240/806**

*only for 24V DC

- 24V DC - **4**
- 220V-240V AC/DC - **7**
- 110V-240V AC/DC - **8**

- **830** - 3000K
- **840** - 4000K

See drawning A

- **K**
- **P**
- **KA**
- **PA**
- **PAK**

- **10** - M 20 Polyamide
- **11** - M 20 Brass
- **13** - M 20 Brass Screen Cable
- **20** - M 25 Polyamide
- **21** - M 25 Brass
- **23** - M 25 Brass Screen Cable

See drawning B

- **H** - mounting bolt kit
- **W** - bracket welded for version „S", fixed for „Z"
- **WD** - bracket welded to housing

2.09

Example of type description

TLP 67S-MLED220/211/7/830/P11/W - stainless steel light fitting with LED panels (2x11W), power supply 220-240V AC/DC; light color temp.: 3000K; through wiring (2 brass glands M20); fixing - two „w" brackets.

A. Cable entry

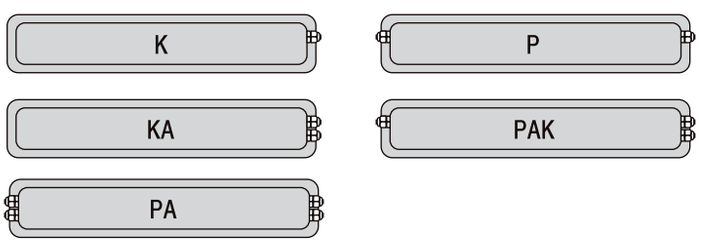

M 20			M 25		
Polyamide	Brass	Brass SC	Polyamide	Brass	Brass SC
Cable dia. 6-12 /mm/	Cable dia. 8-14,5 /mm/	Cable dia. 7-12,5 /mm/	Cable dia. 11-17 /mm/	Cable dia. 9-17 /mm/	Cable dia. 9-17 /mm/
10	11	13	20	21	23

PolamRem

POLAM-REM S.A. 80-531 Gdańsk ul.Sucha 25
tel. +48(0-58) 520-74-00 fax +48(0-58) 343-26-29
www.polam-rem.com.pl; polamrem@polam-rem.com.pl

Technical modification reserved without prior notice

B. Fixing type

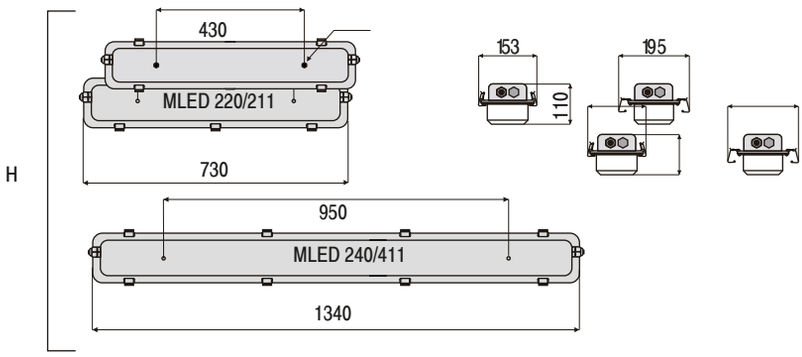

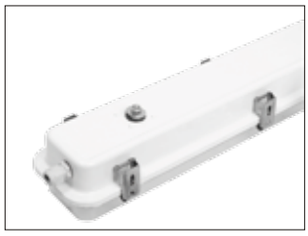

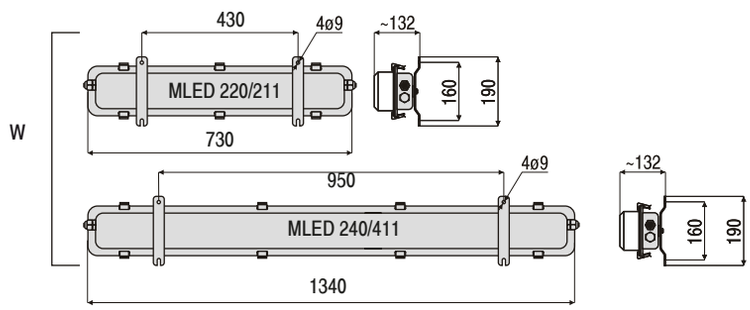

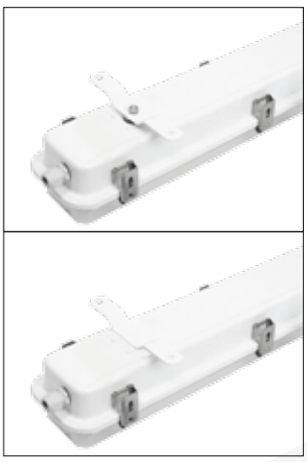

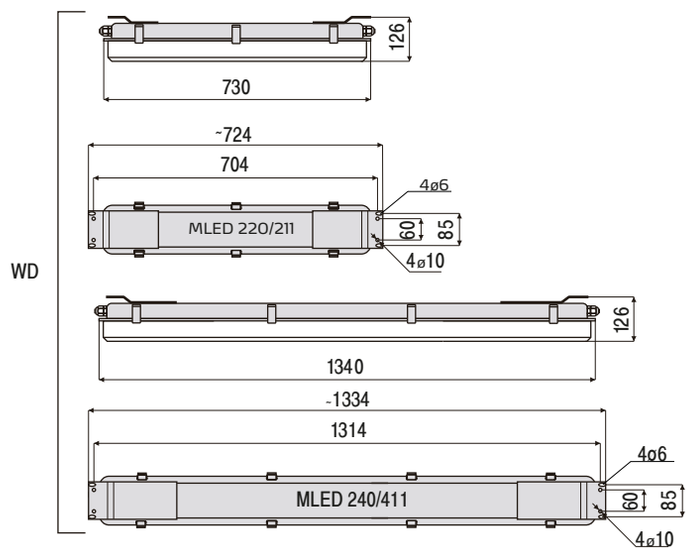

2.10

POLAM-REM S.A. 80-531 Gdañsk ul.Sucha 25
tel. +48(0-58) 520-74-00 fax +48(0-58) 343-26-29
www.polam-rem.eu; sekretariat@polam-rem.eu

Technical modification reserved without prior notice

TLP 53

Pressure Watertight Luminaire, 1x18W

POLAM-REM S.A.

IP 68

220V-250V
50Hz-60Hz

G24q-2

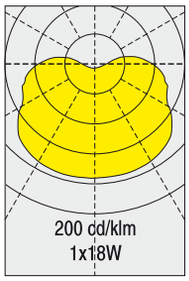

Type	Light source	Light source power / lamp base	Weight
TLP 53 - 0180	tubular compact fluorescent lamp	1 x 18 W / G24q-2	2,7 kg

Application
Decks
Approvals
according to the rules of relevant classification societies, additional IEC
Protection class
IP 68 h20

Housing
clear polycarbonate tube
End caps
polycarbonate
Lamps (not included)
tubular compact fluorescent lamp 18W
Electric
flexible wiring, heat resistant up to 105°C

Cable entry
1 cable glands, M 20
cable ø 7 - 13 mm
Mounting
2 fixing brackets, stainless steel
Electrical connection
see finish section

2.11

[mm]

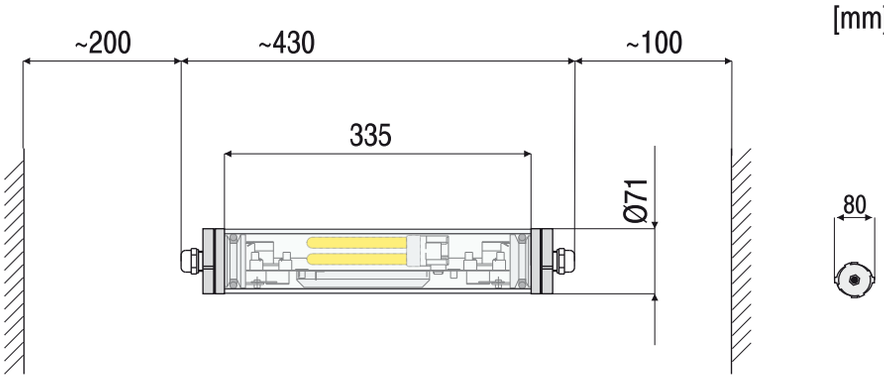

OPTIONS

220V 60Hz	230V 60Hz	120V 60Hz
		240V 50Hz

Electronic Ballast	220V-240V 50Hz-60Hz	220V-240V DC

SC-Glands for screen cable

Fixing brackets

[mm]

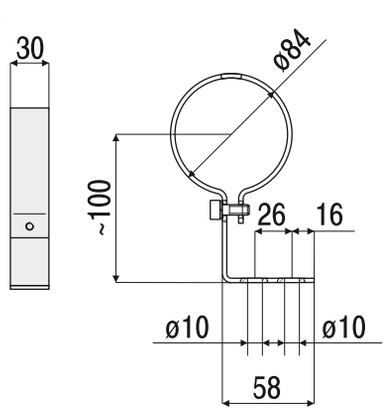

PolamRem
POLAM-REM S.A. 80-531 Gdańsk ul.Sucha 25
tel. +48(0-58) 520-74-00 fax +48(0-58) 343-26-29
www.polam-rem.com.pl; polamrem@polam-rem.com.pl

Technical modification reserved without prior notice

POLAM-REM S.A.

Pressure Watertight Luminaire, 1x18W/36W

TLP 53

IP 68

230V 50Hz

G13

Type	Light source	Light source power / lamp base	Weight
TLP 53 - 1180	fluorescent lamp	1 x 18 W / G 13	3,7 kg
TLP 53 - 1360		1 x 36 W / G 13	4,7 kg

Application
decks
Approvals
according to the rules of relevant classification societies, additional IEC
Protection class
IP 68 h20

Housing
clear polycarbonate tube
End caps
polycarbonate
Lamps (not included)
fluorescent lamp 18W/36W
Electric
flexible wiring, heat resistant up to 105°C

Cable entry
2 cable glands, M 20, cable ø 11 - 14,5 mm
Mounting
2 fixing brackets, stainless steel
Electrical connection
see finish section

2.12

[mm]

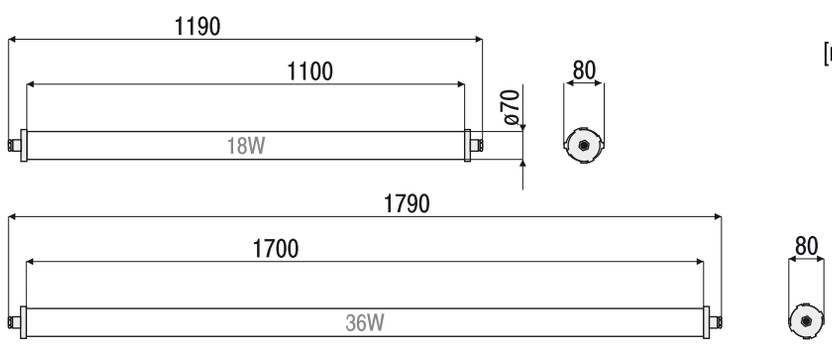

Fixing brackets

[mm]

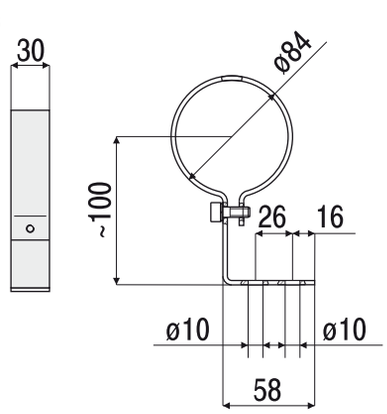

OPTIONS

220V 60Hz | 230V 60Hz | 120V 60Hz

240V 50Hz | 24V DC

Electronic Ballast	220V-240V 50Hz-60Hz	220V-240V DC

SC-Glands for screen cable

PolamRem
POLAM-REM S.A. 80-531 Gdańsk ul.Sucha 25
tel. +48(0-58) 520-74-00 fax +48(0-58) 343-26-29
www.polam-rem.com.pl; polamrem@polam-rem.com.pl

Technical modification reserved without prior notice

POLAM-REM S.A.

Order Specification

Type

TLP 53 - x x x x

1 x 18 W - **118**
1 x 36 W - **136**

Magnetic ballast
- 230V/50Hz - **0**
- 220V-230V/60Hz - **1**
- 120V/60Hz - **2**
- 240V/50Hz - **3**

Electronic ballast
- 24V DC - **4**
- 220V-240V AC/DC - **7**
- 110V-240V AC/DC - **8**

Example of type description

TLP 53 - 1182 light fitting for one fluorescent lamp 18W with socket G13; supply voltage 120V/60Hz;

PolamRem
POLAM-REM S.A. 80-531 Gdańsk ul.Sucha 25
tel. +48(0-58) 520-74-00 fax +48(0-58) 343-26-29
www.polam-rem.com.pl; polamrem@polam-rem.com.pl

Technical modification reserved without prior notice

POLAM-REM S.A.

Kitchen Luminaire, surface 2x18W/2x36W

KLP 61

IP 55

230V 50Hz

G13

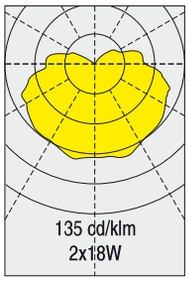

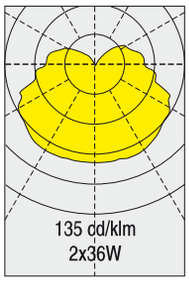

Type	Light source	Light source power / lamp base	Weight
KLP 61 - 2180	fluorescent lamp	2 x 18 W / G 13	4,6 kg
KLP 61 - 2360		2 x 36 W / G 13	6,7 kg

Application
galleys, kitchen, pantries, provision rooms

Approvals
according to the rules of relevant classification societies, additional IEC

Baseplate
stainless steel

Diffuser
polycarbonate, clear

Gasket
silicone rubber

Lamps (not included)
fluorescent lamp 18W / 36W

Electric
flexible wiring, heat resistant up to +105°C

Cable entry
2 plastic cable glands M 20, cable max ø 12 mm

Mounting
6 or 8 mounting holes, ø 5 mm

Electrical connection
see finish section

2.14

[mm]

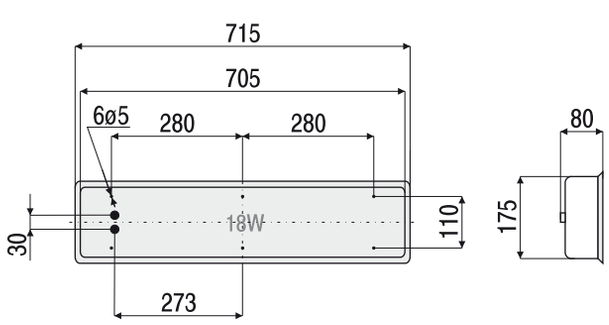

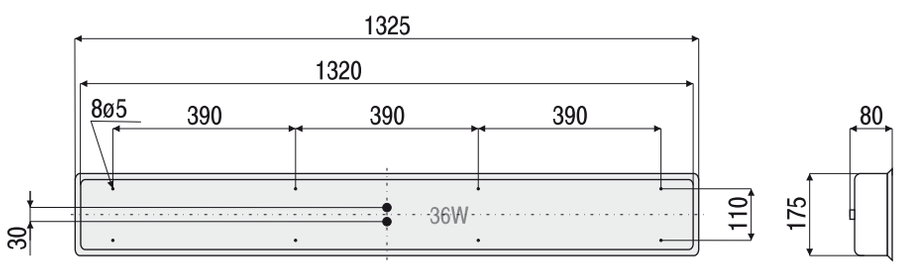

OPTIONS

220V 60Hz | 230V 60Hz | 120V 60Hz

240V 50Hz | 24V DC

Electronic Ballast	220V-240V 50Hz-60Hz	220V-240V DC
Battery Backup System	220V-240V 50Hz-60Hz	1h or 3h

Emergency Lampholder B15d

PolamRem

POLAM-REM S.A. 80-531 Gdańsk ul.Sucha 25
tel. +48(0-58) 520-74-00 fax +48(0-58) 343-26-29
www.polam-rem.com.pl; polamrem@polam-rem.com.pl

Technical modification reserved without prior notice

Kitchen Luminaire, surface 2x18W/2x36W

POLAM-REM S.A.

Order Specification

Type | Options

KLP 61 - x x x x / x x / x x x x

2 x 18 W - **218**
2 x 36 W - **236**

230V/50Hz - **0** /standard/
220V/60Hz - **1**
120V/60Hz - **2**
240V/50Hz - **3**
24V DC - **4**
230V/60Hz - **5**

Emergency lighting
A1 - battery backup system 1h
A3 - battery backup system 3h
B15d - emergency lampholder B15d

Electronic ballast
E - 220 - 240V / 50-60 Hz
E1 - 220 - 240V DC

Example of type description
KLP 61 - 2360 light fitting for two fluorescent lamp 36W with socket G13; supply voltage 230V/50Hz;

Spare parts for kitchen luminaire KLP 61 - 2180

No.	Spare parts	Part-no.
1	Diffuser PC	101 00 61218
2	Diffuser mounting kit	302 00 61218
3	Silicone gasket	601 00 61218
4	Lampholder G 13 /4 pcs./	014 00 61218
5	Ballast /2 pcs./	032 00 61218
6	Capacitor	021 00 61218
7	Cable gland /2 pcs./	042 00 61218

Spare parts for kitchen luminaire KLP 61 - 2360

No.	Spare parts	Part-no.
1	Diffuser PC	101 00 61236
2	Diffuser mounting kit	302 00 61236
3	Silicone gasket	601 00 61236
4	Lampholder G 13 /4 pcs./	014 00 61236
5	Ballast /2 pcs./	032 00 61236
6	Capacitor	021 00 61236
7	Cable gland /2 pcs./	042 00 61236

PolamRem
POLAM-REM S.A. 80-531 Gdańsk ul.Sucha 25
tel. +48(0-58) 520-74-00 fax +48(0-58) 343-26-29
www.polam-rem.com.pl; polamrem@polam-rem.com.pl

Technical modification reserved without prior notice

POLAM-REM S.A.

Coldroom Luminaire, surface
1x18W/2x18W; 1x38W/2x36W

TZP 44

IP 67

230V 50Hz

G13

-30°C

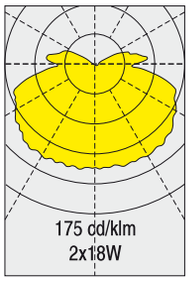

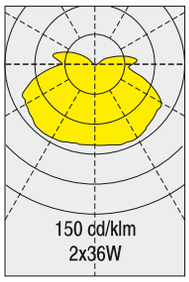

Type	Light source / included /	Light source power / lamp base	Starter / included /	Weight
TZP 44 - 1180	Aura Thermo LL	1 x 18 W / G 13	electronic starter	3,5 kg
TZP 44 - 2180		2 x 18 W / G 13		4,0 kg
TZP 44 - 1360		1 x 36 W / G 13		5,6 kg
TZP 44 - 2360		2 x 36 W / G 13		6,2 kg

Application
coldrooms, refrigerated areas, freezing rooms

Approvals
according to the rules of relevant classification societies, additional IEC

Ambient temp.
- 30°C to + 40°C

Housing
zinc coated steel, seamless deep drawn, powder coated white

Diffuser
polycarbonate, clear

Lamps (included)
fluorescent lamp Aura Thermo LL 18W/36W

Electric
flexible wiring, heat resistant up to +105°C,

Cable entry
max 4 cable glands, to be ordered separately

Mounting
2, 4 or 8 mounting holes, ø 9 mm

Electrical connection
see finish section

2.16

[mm]

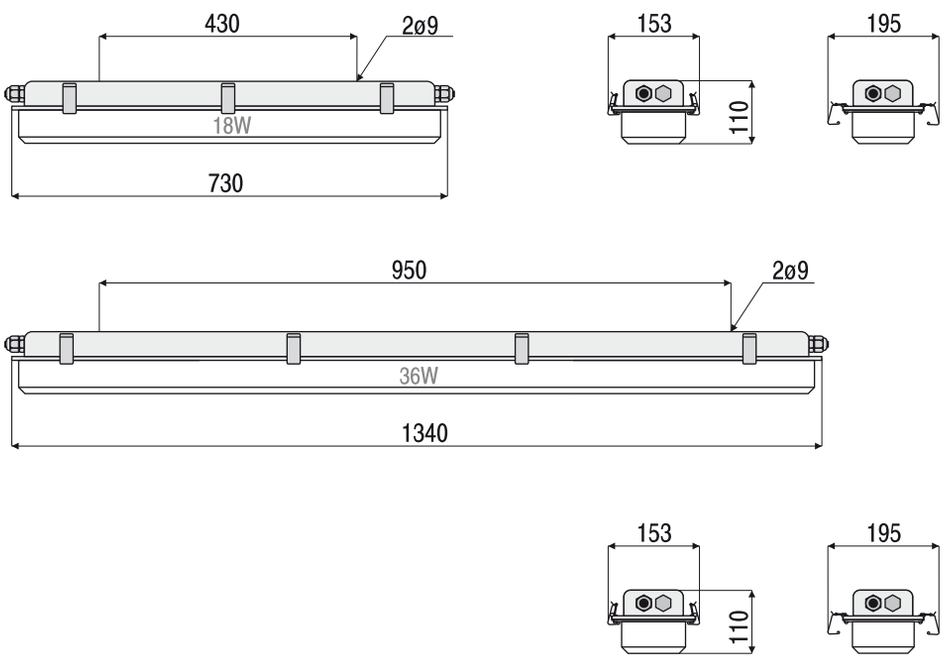

OPTIONS

220V 60Hz

230V 60Hz

120V 60Hz

240V 50Hz

Emergency Lampholder B15d

Stainless Steel Housing

Outside Junction Box

SC-Glands for screen cable

PolamRem

POLAM-REM S.A. 80-531 Gdańsk ul.Sucha 25
tel. +48(0-58) 520-74-00 fax +48(0-58) 343-26-29
www.polam-rem.com.pl; polamrem@polam-rem.com.pl

Technical modification reserved without prior notice

Coldroom Luminaire, surface
1x18W/2x18W; 1x38W/2x36W

POLAM-REM S.A.

Order Specification

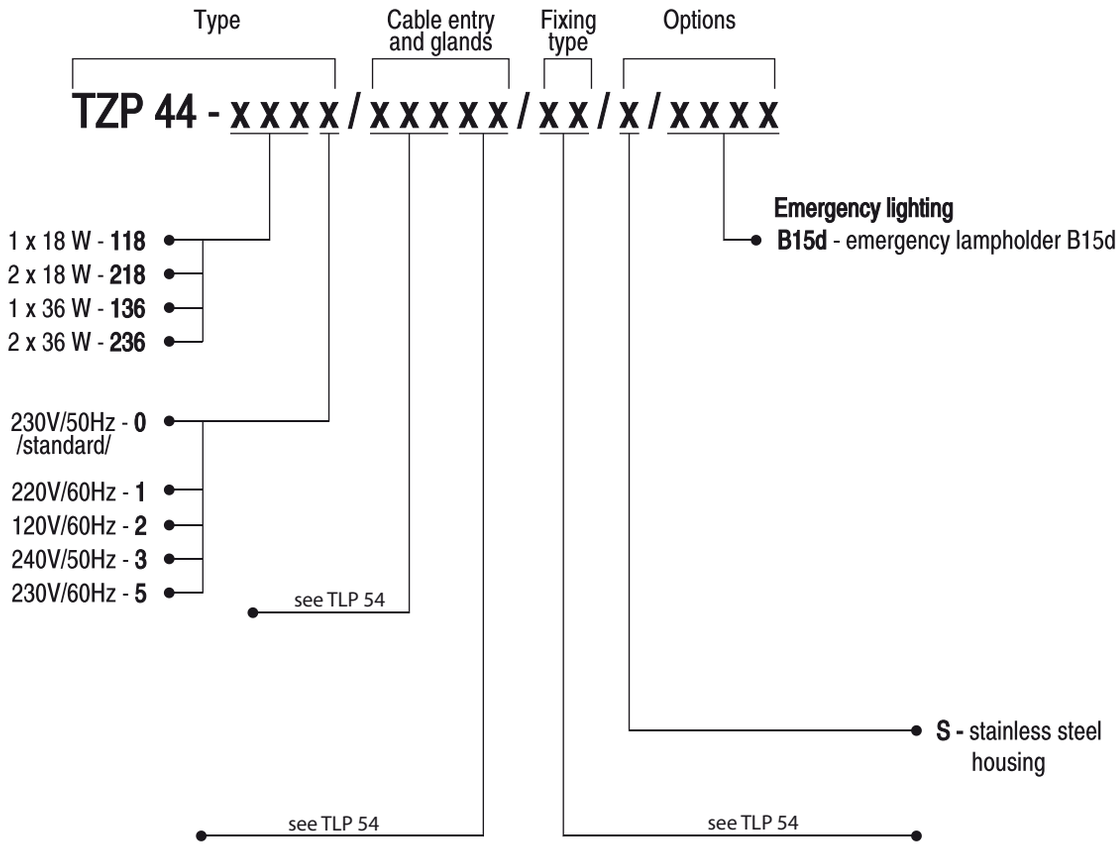

2.17

Example of type description

TZP 44 - 2180/P/W/S light fitting for two fluorescent lamp 18W with socket G13; supply voltage 230V/50Hz; through wiring; cable glands - PG 16; fixing - two welded brackets; housing of stainless steel; / light fitting included two fluorescent lamps Aura Thermo LL 36W and electronic starters /

Spare parts for coldroom luminaire TZP 44 - 2180

No.	Spare parts	Part-no.
1	Diffuser PC, incl. gasket	101 00 44218
2	Lampholder G 13 /4 pcs./	014 00 44218
3	Ballast /2 pcs./	032 00 44218
4	Capacitor	021 00 44218
5	Stainless steel clamps /cpl./	306 00 44218
6	Cable gland /2 pcs./	042 00 44218
7	Mounting kit /2 pcs./	402 00 44218
8	Junction box	501 00 44218
9	Electronic starter	052 00 44218
10	Thermo LL18W /2 pcs./	062 00 44218

Spare parts for coldroom luminaire TZP 44 - 2360

No.	Spare parts	Part-no.
1	Diffuser PC, incl. gasket	101 00 44236
2	Lampholder G 13 /4 pcs./	014 00 44236
3	Ballast /2 pcs./	032 00 44236
4	Capacitor	021 00 44236
5	Stainless steel clamps /cpl./	308 00 44236
6	Cable gland /2 pcs./	042 00 44236
7	Mounting kit /2 pcs./	402 00 44236
8	Junction box	501 00 44236
9	Electronic starter	052 00 44236
10	Thermo LL 36W /2 pcs./	062 00 44236

PolamRem
POLAM-REM S.A. 80-531 Gdańsk ul.Sucha 25
tel. +48(0-58) 520-74-00 fax +48(0-58) 343-26-29
www.polam-rem.com.pl; polamrem@polam-rem.com.pl

Technical modification reserved without prior notice

POLAM-REM S.A.

Coldroom Luminaire, surface 2x18W/2x36W

KZP 61

IP 55

230V 50Hz

G13

-30°C

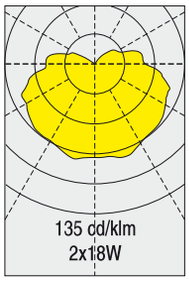

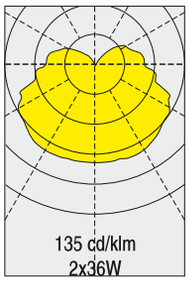

Type	Light source / included /	Light source power / lamp base	Starter / included /	Weight
KZP 61 - 2180	Aura Thermo LL	2 x 18 W / G 13	electronic starter	4,6 kg
KZP 61 - 2360		2 x 36 W / G 13		6,7 kg

Application
coldroom, refigerated areas, freezing rooms
Approvals
according to the rules of relevant classification societies, additional IEC
Baseplate
stainless steel
Ambient temp.
- 30°C to + 40°C

Diffuser
polycarbonate, clear
Gasket
silicone rubber
Lamps (included)
fluorescent lamp
Aura Thermo LL 18W/36W
Electric
flexible wiring, heat resistant up to +105°C

Cable entry
2 plastic cable glands M 20
cable max ø 13 mm
Mounting
6 or 8 mounting holes, ø 5 mm
Electrical connection
see finish section

2.18

[mm]

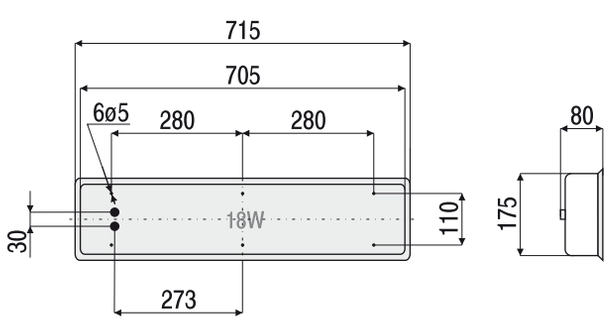

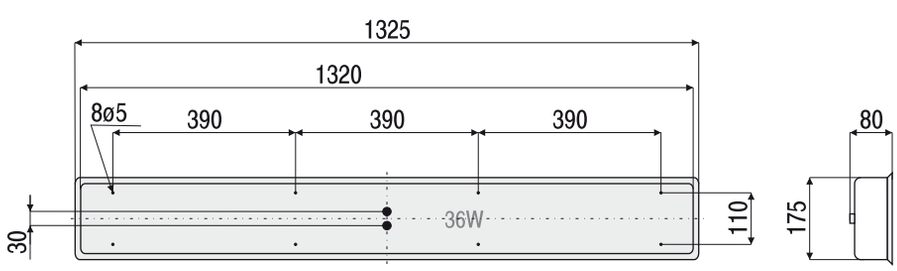

OPTIONS

220V 60Hz

230V 60Hz

120V 60Hz

240V 50Hz

Emergency Lampholder B15d

PolamRem

POLAM-REM S.A. 80-531 Gdańsk ul.Sucha 25
tel. +48(0-58) 520-74-00 fax +48(0-58) 343-26-29
www.polam-rem.com.pl; polamrem@polam-rem.com.pl

Technical modification reserved without prior notice

Coldroom Luminaire, surface 2x18W/2x36W

POLAM-REM S.A.

Order Specification

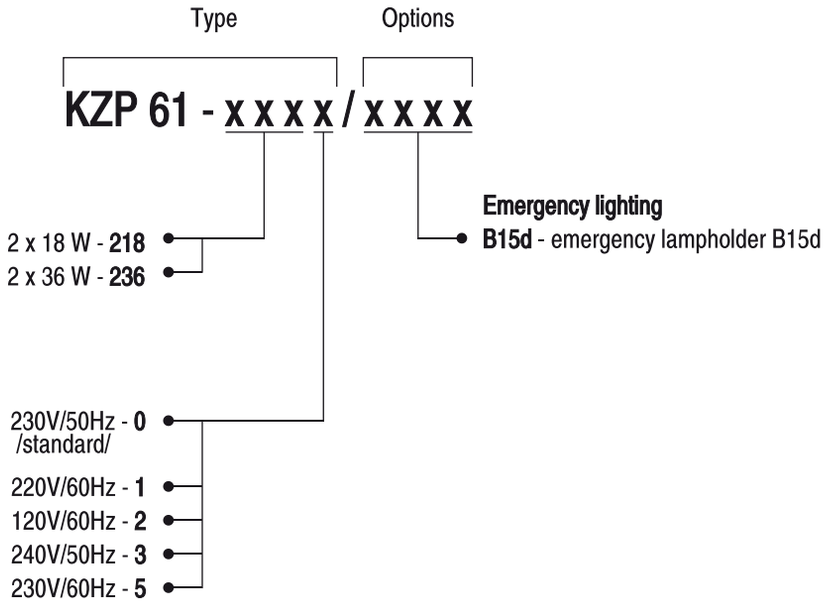

Example of type description

KZP 61 - 2360 light fitting for two fluorescent lamp 36W with socket G13; supply voltage 230V/50Hz; / light fitting included two fluorescent lamps Aura Thermo LL 36W and electronic starters /

Spare parts for coldroom luminaire KZP 61 - 2180

No.	Spare parts	Part-no.
1	Diffuser PC	101 00 61218
2	Diffuser mounting kit	302 00 61218
3	Silicone gasket	601 00 61218
4	Lampholder G 13 /4 pcs./	014 00 61218
5	Ballast /2 pcs./	032 00 61218
6	Capacitor	021 00 61218
7	Cable gland /2 pcs./	042 00 61218
8	Electronic starter	052 00 61218
9	Thermo LL 18W /2 pcs./	062 00 61218

Spare parts for coldroom luminaire KZP 61 - 2360

No.	Spare parts	Part-no.
1	Diffuser PC	101 00 61236
2	Diffuser mounting kit	302 00 61236
3	Silicone gasket	601 00 61236
4	Lampholder G 13 /4 pcs./	014 00 61236
5	Ballast /2 pcs./	032 00 61236
6	Capacitor	021 00 61236
7	Cable gland /2 pcs./	042 00 61236
8	Electronic starter	052 00 61236
9	Thermo LL 36W /2 pcs./	062 00 61236

PolamRem
POLAM-REM S.A. 80-531 Gdańsk ul.Sucha 25
tel. +48(0-58) 520-74-00 fax +48(0-58) 343-26-29
www.polam-rem.com.pl; polamrem@polam-rem.com.pl

Technical modification reserved without prior notice

POLAM-REM S.A.

Explosionproof Luminaire, surface, 2x18W/2x36W

EXP 03

IP 66

IP 67

220V-250V
50Hz-60Hz

G13

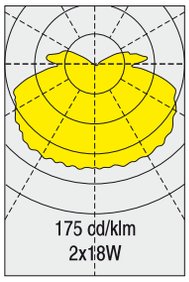

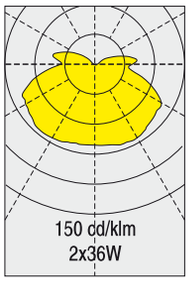

Type	Code	Light source	Light source power / lamp base	Weight
EXP 03 - 2180	203-218 Ex	fluorescent lamp	2 x 18 W / G 13	6,1 kg
EXP 03 - 2360	203-236 Ex		2 x 36 W / G 13	8,3 kg
EXP 03 - 2180/A3	203-218 Ex/A3		2 x 18 W / G 13	7,1 kg
EXP 03 - 2360/A3	203-236 Ex/A3		2 x 36 W / G 13	9,3 kg

Application
hazardous areas zone 2, 22
Approvals authority:
KDB - BARBARA
Protection type
ExnA II, T5
Insulation class
1

Housing
zinc coated steel, seamless deep drawn, powder coated white
Diffuser
clear polycarbonate
Lamps (not included)
fluorescent lamp 18W/36W
Electric
flexible wiring, heat resistant up to +105°C

Cable entry
2 plastic cable glands M 20
cable max ø 13 mm
Mounting
2 welded brackets with
2 mounting holes ø 9 mm
Electrical connection
see finish section

2.20

[mm]

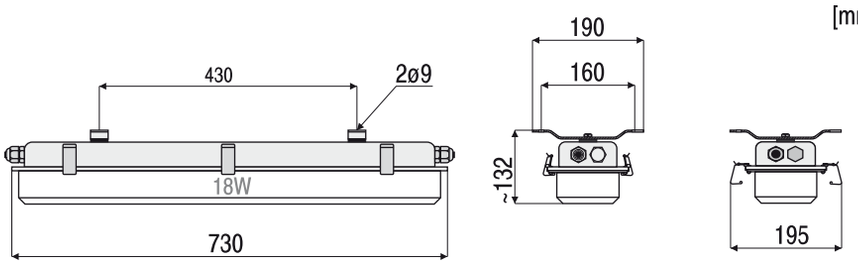

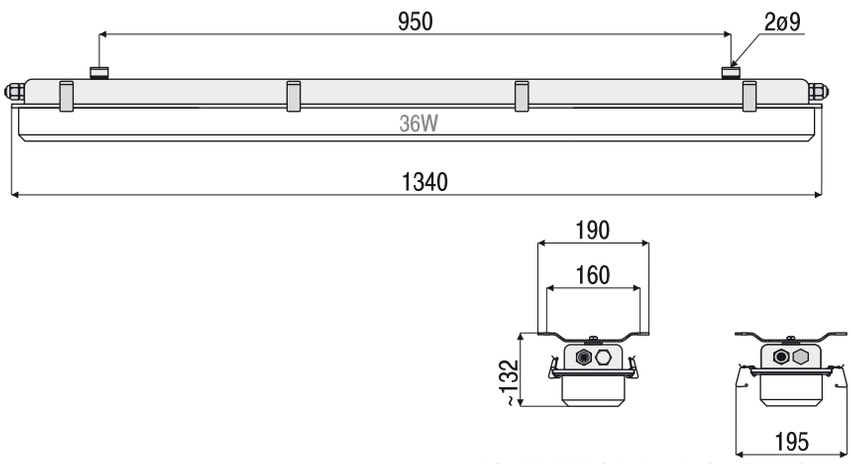

OPTIONS

Stainless Steel Housing

Battery Backup System 220V-240V 50Hz-60Hz 3h

SC-Glands for screen cable

PolamRem

POLAM-REM S.A. 80-531 Gdańsk ul.Sucha 25
tel. +48(0-58) 520-74-00 fax +48(0-58) 343-26-29
www.polam-rem.com.pl; polamrem@polam-rem.com.pl

Technical modification reserved without prior notice

EXP 83

Explosionproof Luminaire, surface, 2x18W/2x36W

POLAM-REM S.A.

IP 66

IP 67

220V-250V
50Hz-60Hz

G13

Type	Light source	Light source power / lamp base	Weight
EXP 83 - 218...	fluorescent lamp	2 x 18 W / G 13	6,1 kg
EXP 83 - 236...		2 x 36 W / G 13	8,3 kg

Application
hazardous areas zone 1, 2
Approvals authority:
ATEX
Protection type
CE Ex
II 2G Ex de mb IIC T5 Gb
II 2D Ex t IIIC T60°C-T65°C IP66/67 Db
Insulation class
1

Housing
zinc coated steel, seamless deep drawn, powder coated white
Diffuser
clear polycarbonate
Lamps (not included)
fluorescent lamp 18W/36W
Electric
flexible wiring, heat resistant up to +105°C

Cable entry
2 plastic cable glands M 20
cable max ø 13 mm
Mounting
2 welded brackets with
2 mounting holes ø 9 mm

2.21

[mm]

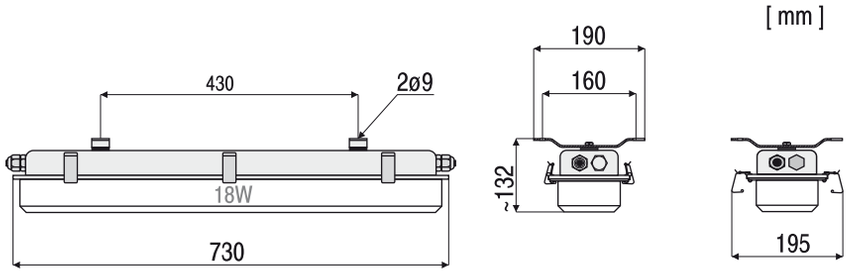

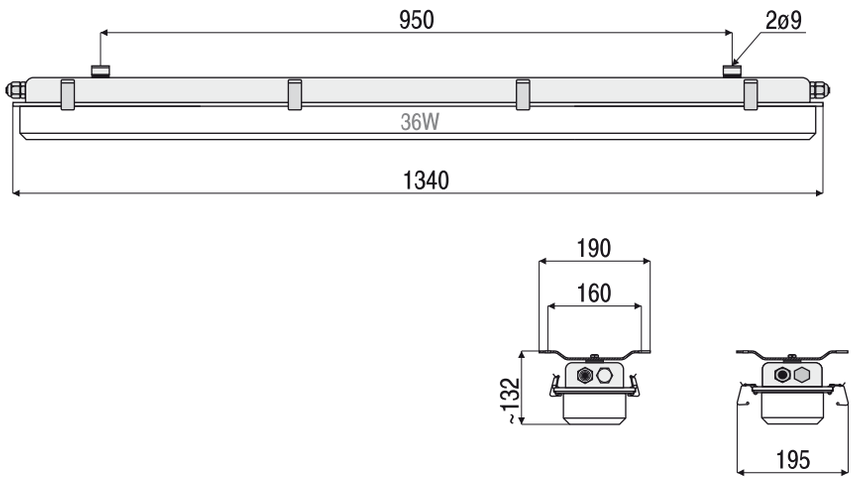

OPTIONS

Stainless Steel Housing

Electronic Ballast 110V-127V 50-60Hz

SC-Glands for screen cable

Battery Backup System 220V-250V 50-60Hz 3h

Battery Backup System 110V-127V 50-60Hz 3h

PolamRem
POLAM-REM S.A. 80-531 Gdańsk ul.Sucha 25
tel. +48(0-58) 520-74-00 fax +48(0-58) 343-26-29
www.polam-rem.com.pl; polamrem@polam-rem.com.pl

Technical modification reserved without prior notice

Power supply voltage | Cable entry and glands | Options

EXP 83 - X X X X / X X X X / X / X X X X *

Emergency lighting
- **A3/AT** - battery backup system 3h with auto-test module

1 x 18 W - **118**
2 x 18 W - **218**
1 x 36 W - **136**
2 x 36 W - **236**

K
P
KA
PA
PAK
See drawning A

- **S -** stainless steel housing

220V-250V 50-60Hz - **0**
110V-127V 50-60Hz - **2**

- **10** - M 20 Polyamide
- **11** - M 20 Brass
- **13** - M 20 Brass Screen Cable
- **20** - M 25 Polyamide
- **21** - M 25 Brass
- **23** - M 25 Brass Screen Cable

2.22

*marking on the label may differ from the order specification

Example of type description

EXP 83 - 2180/PA10/S - explosion proof light fitting for two fluorescent lamps 18W with socket G13; supply voltage 220V-250V AC/DC; through wiring with 4 poliamide M20 glands; stainless steel housing.

A. Cable entry

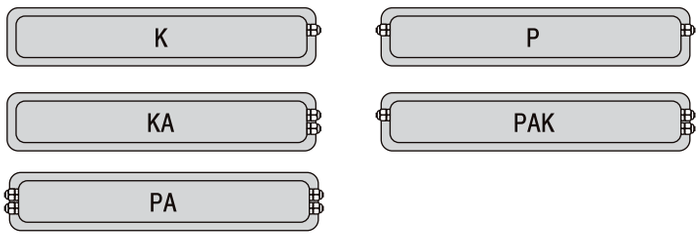

M 20			M 25		
Polyamide	Brass	Brass SC	Polyamide	Brass	Brass SC
Cable dia. 8-13 /mm/	Cable dia. 8-14,5 /mm/	Cable dia. 7-12,5 /mm/	Cable dia. 11-17 /mm/	Cable dia. 9-17 /mm/	Cable dia. 9-17 /mm/
	11	13	20	21	23

PolamRem

POLAM-REM S.A. 80-531 Gdańsk ul.Sucha 25
tel. +48(0-58) 520-74-00 fax +48(0-58) 343-26-29
www.polam-rem.com.pl; polamrem@polam-rem.com.pl

Technical modification reserved without prior notice

POLAM-REM S.A.

Wall and Ceiling Luminaires, recessed

DEP 35	3.01 - 3.02
DEP 30	3.03 - 3.04
DEP 16	3.05 - 3.06
DEP 19	3.07 - 3.09
DEP 19 MLED	3.10 - 3.11
DEP 28	3.12 - 3.13
DEP 28 MLED	3.14 - 3.15
DEP 95	3.16 - 3.17
KJP 39	3.18 - 3.19
KJP 40	3.20 - 3.21

PolamRem

POLAM-REM S.A. 80-531 Gdańsk ul.Sucha 25
tel. +48(0-58) 520-74-00 fax +48(0-58) 343-26-29
www.polam-rem.com.pl; polamrem@polam-rem.com.pl

Technical modification reserved without prior notice

POLAM-REM S.A.

Ceiling Luminaire, recessed, 2x7W/2x9W/1x60W

DEP 35

IP 44

230V 50Hz

G23

E27

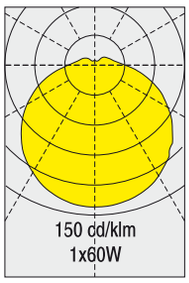

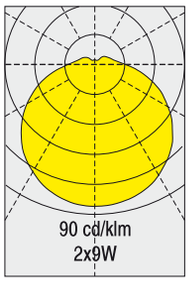

Type	Code	Light source	Light source power / lamp base	Weight
DEP 35 - 2070	335 - 207	tubular compact fluorescent lamp	2 x 7 W / G 23	1,8 kg
DEP 35 - 2090	335 - 209		2 x 9 W / G 23	1,8 kg
DEP 35 - 1060	335 - 160	incadescent lamp	1 x 60 W / E 27	0,9 kg

Application
cabins, lounges, dining rooms, accomodation areas, bath rooms

Approvals
according to the rules of relevant classification societies, additional IEC

Protection class
IP 44 in conjunction with ceiling

Housing
zinc coated steel, powder coated white

Diffuser
polycarbonate, opal

Fascia
gold, silver, white

Lamps (not included)
incandescent lamp max 60W or tubular compact fluorescent lamp 7W/9W

Electric
flexible wiring, heat resistant up to +105°C

Cable entry
1 inlet, cable ø max 11 mm

Mounting
8 mounting holes, ø 4 mm

Electrical connection
see finish section

3.01

[mm]

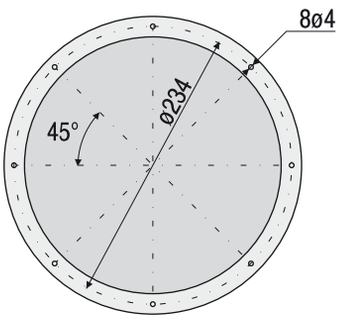

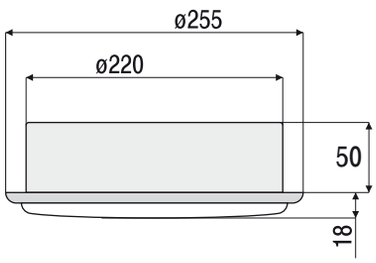

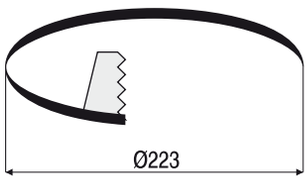

OPTIONS

220V 60Hz | 230V 60Hz | 120V 60Hz

240V 50Hz | 24V DC

Electronic Ballast	220V-240V 50Hz-60Hz	220V-240V DC
Battery Backup System	220V-240V 50Hz-60Hz	1h or 3h

PolamRem

POLAM-REM S.A. 80-531 Gdańsk ul.Sucha 25
tel. +48(0-58) 520-74-00 fax +48(0-58) 343-26-29
www.polam-rem.com.pl; polamrem@polam-rem.com.pl

Technical modification reserved without prior notice

Ceiling Luminaire, recessed, 2x7W/2x9W/1x60W

POLAM-REM S.A.

Order Specification

Type | Fascia | Options

DEP 35 - x x x x / x / x x / x x x

2 x 7 W - **207**
2 x 9 W - **209**
1 x 60 W - **160**

230V/50Hz - **0** /standard/
220V/60Hz - **1**
120V/60Hz - **2**
240V/50Hz - **3**
24V DC - **4**
230V/60Hz - **5**

Emergency lighting
A1 - battery backup system 1h
A3 - battery backup system 3h

Electronic ballast
E - 220 - 240V / 50-60 Hz
E1 - 220 - 240V DC

B - white
Z - gold
S - silver

Example of type description
DEP 35 - 2070/B light fitting for tubular compact fluorescent lamp 7W with socket G23; supply voltage 230V/50Hz; fascia - white

Spare parts for ceiling luminaire DEP 35

No.	Spare parts	Part-no.
1	Diffuser PC, opal	101 00 35000
2a	Lampholder G 23 /2 pcs./	012 00 35000
2b	Lampholder E 27 /1 pcs./	011 01 35000
3	Ballast /2 x 7 W/	031 00 35207
4	Ballast /2 x 9 W/	031 00 35209
5a	Fascia gold	701 02 35000
5b	Fascia silver	701 01 35000
5c	Fascia white	701 00 35000

PolamRem
POLAM-REM S.A. 80-531 Gdańsk ul.Sucha 25
tel. +48(0-58) 520-74-00 fax +48(0-58) 343-26-29
www.polam-rem.com.pl; polamrem@polam-rem.com.pl

Technical modification reserved without prior notice

POLAM-REM S.A.

Ceiling Luminaire, recessed, 2x11W, 2x18W

DEP 30

IP 44

220V-250V
50Hz-60Hz

2G7

2G11

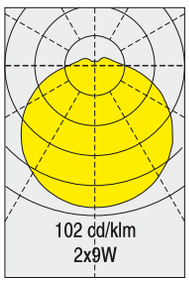

Type	Light source	Light source power / lamp base	Weight
DEP 30 - 2110	tubular compact fluorescent lamp	2 x 9 W/11W / 2 G 7	2,3 kg
DEP 30 - 2180		2 x 18 W / 2 G 11	2,3 kg

Application
passage ways, cabins, lounges, dining rooms, accomodation areas

Approvals
according to the rules of relevant classification societies, additional IEC

Protection class
IP 44 in conjunction with ceiling

Housing
zinc coated steel, powder coated white

Diffuser
polycarbonate, opal

Lamps (not included)
fluorescent lamp 9W; 11W; 18W

Electric
flexible wiring, heat resistant up to +105°C

Cable entry
4 inlets, cable ø max 11 mm

Mounting
4 mounting holes, ø 5.5 mm, cut out 250 x 250 mm

Electrical connection
see finish section

3.03

[mm]

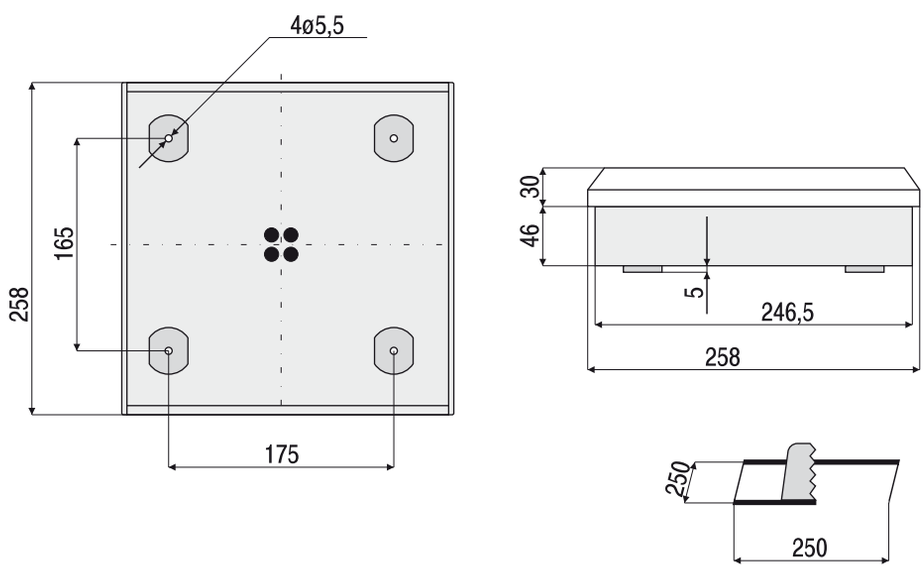

OPTIONS

120V
60Hz

24V DC

Battery Backup System 220V-240V 50Hz-60Hz 1h or 3h

Emergency Lampholder B15d

PolamRem

POLAM-REM S.A. 80-531 Gdańsk ul.Sucha 25
tel. +48(0-58) 520-74-00 fax +48(0-58) 343-26-29
www.polam-rem.com.pl; polamrem@polam-rem.com.pl

Technical modification reserved without prior notice

Order Specification

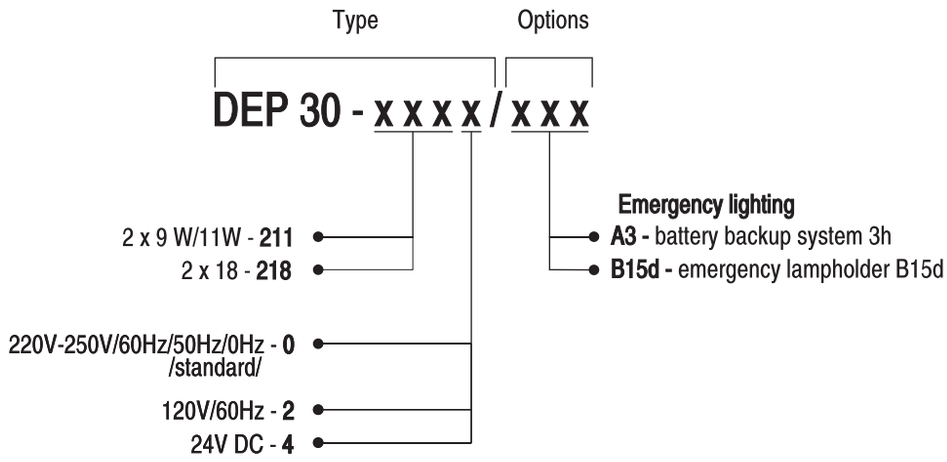

Example of type description

DEP 30 - 2110 light fitting for two fluorescent lamp 11W with socket 2G7; supply voltage 220V-250V/60Hz/50Hz/0Hz

Spare parts for ceiling luminaire DEP 30 - 2...

No.	Spare parts	Part-no.
1	Diffuser PC, opal	101 00 35000
2	Lampholder 2G7 /2 pcs./	012 00 35009
3	Lampholder 2G11 /2 pcs./	031 00 35211
4	Ballast /1 x 11W/ /2 pcs./	031 00 35211
5	Ballast /1 x 18W/ /2 pcs./	031 00 35218

POLAM-REM S.A. 80-531 Gdańsk ul.Sucha 25
tel. +48(0-58) 520-74-00 fax +48(0-58) 343-26-29
www.polam-rem.com.pl; polamrem@polam-rem.com.pl

Technical modification reserved without prior notice

POLAM-REM S.A.

Ceiling Luminaire, recessed, 2x18W/2x36W

DEP 16

IP 44

230V 50Hz

G13

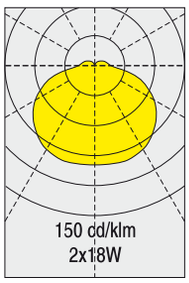

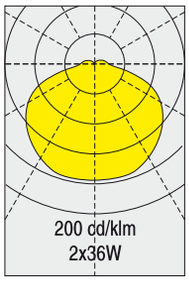

Type	Light source	Light source power / lamp base	Weight
DEP 16 - 2180	fluorescent lamp	2 x 18 W / G 13	3,3 kg
DEP 16 - 2360		2 x 36 W / G 13	6,4 kg

Application
passage ways, cabins, lounges, dining rooms, accomodation areas

Approvals
according to the rules of relevant classification societies, additional IEC

Protection class
IP 44 in conjunction with ceiling

Housing
zinc coated steel, powder coated white

Diffuser
polycarbonate, opal

Lamps (not included)
fluorescent lamp 18W/36W

Electric
flexible wiring, heat resistant up to +105°C

Cable entry
4 inlets, cable ø max 11 mm

Mounting
4 mounting holes, ø 5.5 mm, cut out
18W, 635 x 250 mm,
36W, 1245 x 250 mm

Electrical connection
see finish section

3.05

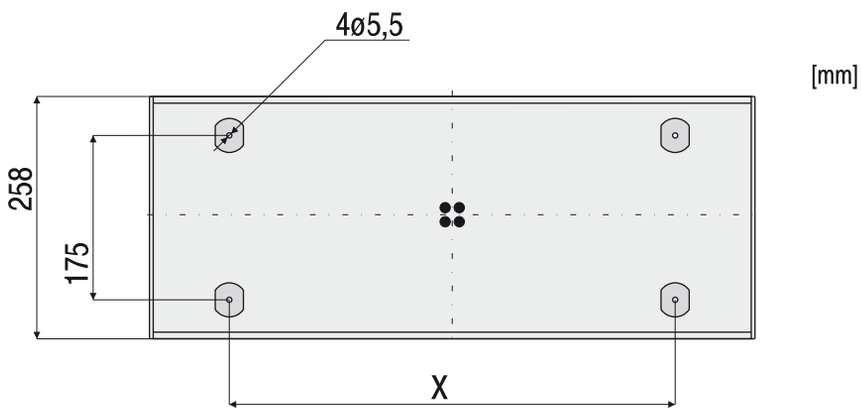

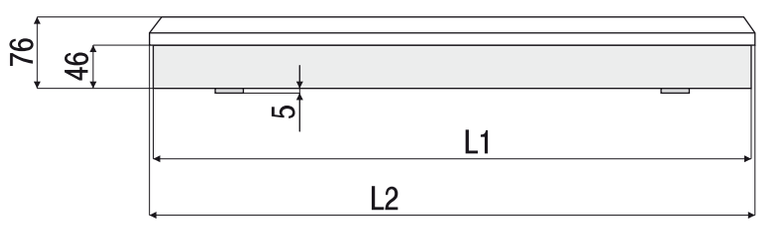

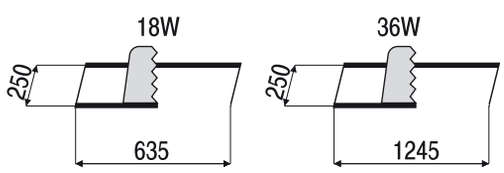

Type	L1	L2	X
DEP 16/2x18W	633,5	645	475
DEP 16/2x36W	1243,5	1255	950

OPTIONS

220V 60Hz | 230V 60Hz | 120V 60Hz

240V 50Hz | 24V DC

Electronic Ballast 220V-240V 50Hz-60Hz 220V-240V DC

Dimmable Electronic Ballast 220V-240V 50Hz-60Hz

Battery Backup System 220V-240V 50Hz-60Hz 1h or 3h

Emergency Lampholder B15d

Antimagnetic

B0 Execution

PolamRem

POLAM-REM S.A. 80-531 Gdańsk ul.Sucha 25
tel. +48(0-58) 520-74-00 fax +48(0-58) 343-26-29
www.polam-rem.com.pl; polamrem@polam-rem.com.pl

Technical modification reserved without prior notice

POLAM-REM S.A.

Order Specification

Type | Options

DEP 16 - x x x x / x / x / x x / x x x

2 x 18 W - **218**
2 x 36 W - **236**

230V/50Hz - **0** /standard/
220V/60Hz - **1**
120V/60Hz - **2**
240V/50Hz - **3**
24V DC - **4**
230V/60Hz - **5**

Emergency lighting
A1 - battery backup system 1h
A3 - battery backup system 3h
B15d - emergency lampholder B15d

Electronic ballast
E - 220 - 240V / 50-60 Hz
E1 - 220 - 240V DC
ED - dimmable electronic ballast

M - antimagnetic

BO - BO-execution

Example of type description
DEP 16 - 2180 light fitting for two fluorescent lamp 18W with socket G13; supply voltage 230V/50Hz;

Spare parts for ceiling luminaire DEP 16 - 2180

No.	Spare parts	Part-no.
1	Diffuser PC, opal	101 00 16218
2	Lampholder G 13 /4 pcs./	014 00 16218
3	Ballast /2 pcs./	032 00 16218
4	Capacitor	021 00 16218

Spare parts for ceiling luminaire DEP 16 - 2360

No.	Spare parts	Part-no.
1	Diffuser PC, opal	101 00 16236
2	Lampholder G 13 /4 pcs./	014 00 16236
3	Ballast /2 pcs./	032 00 16236
4	Capacitor	021 00 16236

POLAM-REM S.A. 80-531 Gdańsk ul.Sucha 25
tel. +48(0-58) 520-74-00 fax +48(0-58) 343-26-29
www.polam-rem.com.pl; polamrem@polam-rem.com.pl

Technical modification reserved without prior notice

POLAM-REM S.A.

Ceiling Luminaire, recessed, 2x18W, 2x36

DEP 19

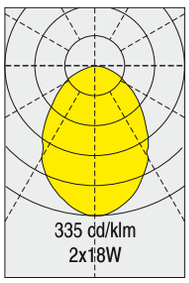

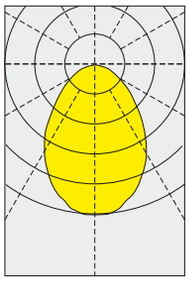

IP 20

IP 44

230V 50Hz

G13

Type	Code	Light source	Light source power / lamp base	Weight
DEP 19 - 2180	319 - 218	fluorescent lamp	2 x 18 W / G 13	4,2 kg
DEP 19 - 2360	319 - 236	fluorescent lamp	2 x 36 W / G 13	5,2 kg

Aplication
accommodation areas, passage ways, cabins, etc.

Approvals
according to the rules of relevant classification societies, additional IEC

Housing
zinc coated steel, powder coated white

Cover
diffuser made of PC opal or aluminium-louvre silver

Lamps (not included)
fluorescent lamp 18W,36W

Electric
flexible wiring, heat resistant up to +105°C

Cable entry
2 plastic inlets, cable max ø 11 mm

Type of Ceiling
I strip ceiling - produced by FAMOS
II panel ceiling - produced by FAMOS,LUBMOR
III tile ceiling -produced by FAMOS,LUBMOR

Mounting
4 mounting holes (type A), special bracket (type B) or special bracket (type C)

Electrical connection
see finish section

3.07

[mm]

Drawing 1

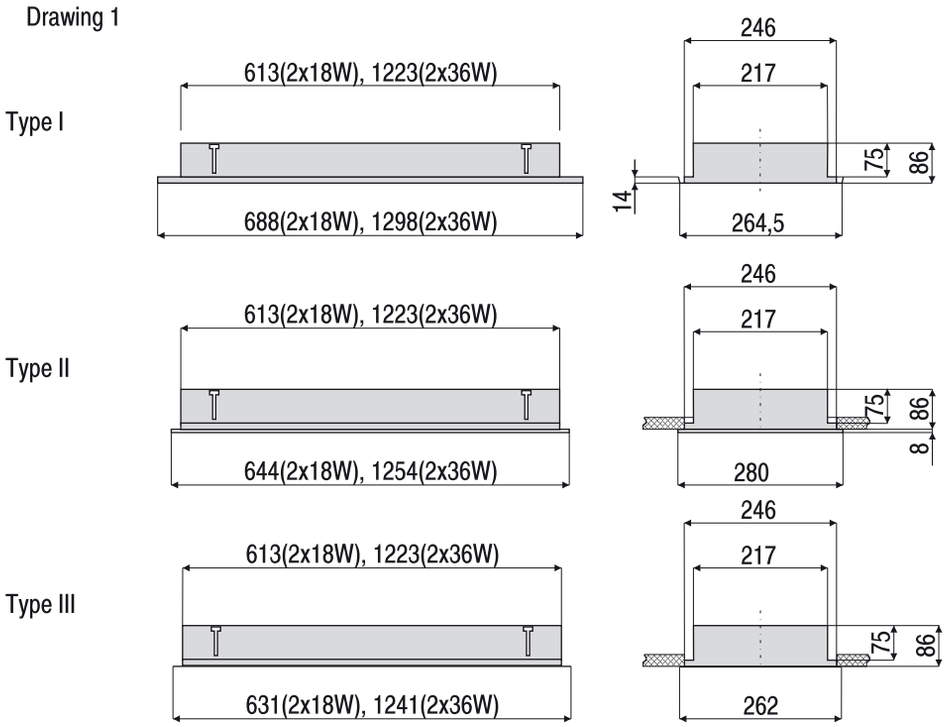

OPTIONS

220V 60Hz | 230V 60Hz | 120V 60Hz

240V 50Hz | 24V DC

Electronic Ballast: 220V-240V 50Hz-60Hz | 220V-240V DC

Dimmable Electronic Ballast: 220V-240V 50Hz-60Hz

Battery Backup System: 220V-240V 50Hz-60Hz | 1h or 3h

Emergency Lampholder B15d | Different Diffuser

Antimagnetic | Red Filter

Emergency Lampholder B15d

PolamRem

POLAM-REM S.A. 80-531 Gdańsk ul.Sucha 25
tel. +48(0-58) 520-74-00 fax +48(0-58) 343-26-29
www.polam-rem.com.pl; polamrem@polam-rem.com.pl

Technical modification reserved without prior notice

Ceiling Luminaire, recessed, 2x18W

POLAM-REM S.A.

Order Specification

Type | Diffuser | Type of ceilling | Fixing type | Options

DEP 19 - x x x x / x x x x x x / x x x / x x / x / x x / x x x x

- 2 x 18 W - **218**
- 2 x 36 W - **236**

- 230V/50Hz - **0** /standard/
- 220V/60Hz - **1**
- 120V/60Hz - **2**
- 240V/50Hz - **3**
- 24V DC - **4**
- 230V/60Hz - **5**

- PC opal / IP 44 / - **PC**
- Plastic louvre /IP 20/ - **R** /silver metallized/
- Plastic louvre /IP 20/ - **R1** /gold metallized/
- Plastic louvre /IP 20/ - **R2** /white/
- red filter - **FC**
- frame of stainless steel - **RS**

- see drawing 1
  - **I**
  - **II**
  - **III**

- see drawing 2
  - **A** /standard/
  - **B**
  - **C**

- **M** - antimagnetic

Electronic ballast
- **E** - 220 - 240V / 50-60 Hz
- **E1** - 220 - 240V DC
- **ED** - dimmable electronic ballast

Emergency lighting
- **A1** - battery backup system 1h
- **A3** - battery backup system 3h
- **B15d** - emergency lampholder B15d

Example of type description

DEP 19 - 2180/PC/I light fitting for two fluorescent lamp 18W with socket G13; supply voltage 230V/50Hz; diffuser - PC opal; type of ceiling - I strip ceiling (produced by FAMOS), mounting - 4 mounting holes (type A)

PolamRem

POLAM-REM S.A. 80-531 Gdańsk ul.Sucha 25
tel. +48(0-58) 520-74-00 fax +48(0-58) 343-26-29
www.polam-rem.com.pl; polamrem@polam-rem.com.pl

Technical modification reserved without prior notice

Drawing 2

Mounting type A

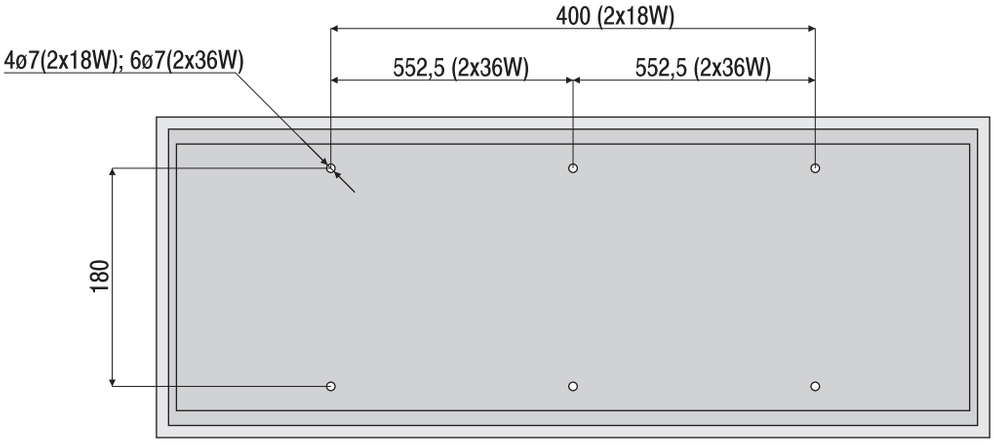

Mounting type B

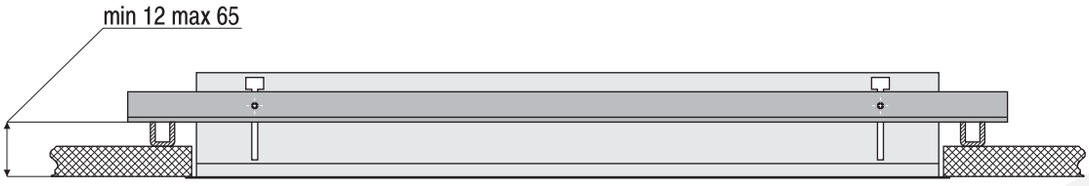

Mounting type C

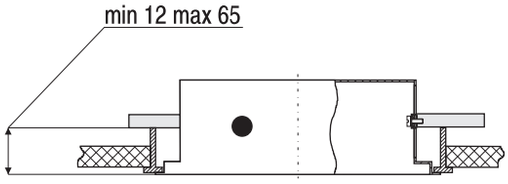

PolamRem

POLAM-REM S.A. 80-531 Gdańsk ul.Sucha 25
tel. +48(0-58) 520-74-00 fax +48(0-58) 343-26-29
www.polam-rem.com.pl; polamrem@polam-rem.com.pl

Technical modification reserved without prior notice

DEP 19 MLED

Ceiling recessed luminaire, 2x11W / 4x11W LED

POLAM-REM S.A.

IP 44

220-240V AC/DC

LED

Optional diffusers:

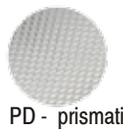

PD - prismatic

OD - opal

Type	Wattage	Light Source	Weight	Light flux	Equivalent
DEP 19-MLED220/211/...	2 x 11 W	LED	3,9 KG	2 x 1250 lm	2x18W (T8); 2x14W (T5)
DEP 19-MLED240/411/...	4 x 11 W	LED	4,2 KG	4 x 1250 lm	2x36W (T8); 2x28W (T5)

Application
Accommodation areas, passage ways, cabins, etc.

Approvals
According to the rules of relevant classification societies, additional IEC

Housing
zinc coated steel, powder painted white

Cover
Opal or prismatic diffuser

Cable entry
2 inlet, cable max ø 20 mm

Mounting
4 mounting holes ø 7mm
or special bracket ordered separately

Electrical connection
See finish section

Type of ceiling
I strip ceiling - produced by FAMOS
II panel ceiling - produced by FAMOS,LUBMOR
III tile ceiling -produced by FAMOS,LUBMO

3.10

OPTIONS

110-240V AC/DC

Battery Backup System 3h

Dimmable

Stainless Steel

Plug and Socket

Different Diffuser

Red/White Filter

Red Filter

Antimagnetic

[mm]

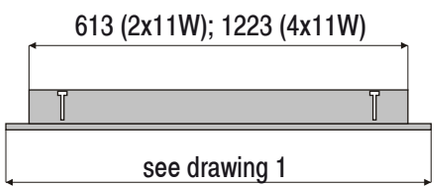

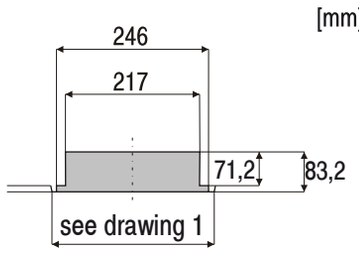

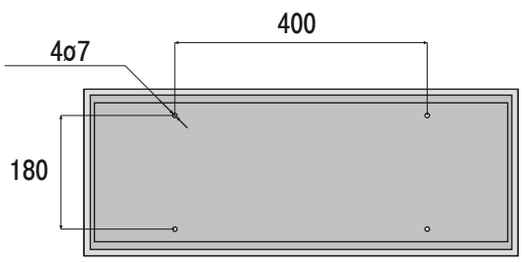

PolamRem

POLAM-REM S.A. 80-531 Gdańsk ul.Sucha 25
tel. +48(0-58) 520-74-00 fax +48(0-58) 343-26-29
www.polam-rem.com.pl; polamrem@polam-rem.com.pl

Technical modification reserved without prior notice

Order Specification

DEP19 MLED x x x/x x x/x/x x x/x x/x x/x x x/x x/x x/x x/x x

- Wattage
  - **220/211**-2 x 11 W
  - **240/411**-4 x 11 W
- Supply voltage
  - 220-240V AC/DC - **7**
  - 110-240V AC/DC - **8**
- Colour temp.
  - 3000K - **830**
  - 4000K - **840**
- Diffuser
  - Opal diffuser - **OD**
  - Prismatic diffuser - **PD**
- Type of ceiling (see drawing 1)
  - I
  - II
  - III
- Options
  - **FC**- red filter
  - **FCB** - red-white filter
  - **RS** - stainless steel frame without painting
  - **M** - antimagnetic
  - **ED** - Electronic dimmable
- Emergency version
  - **A3** - Battery backup system 3h

Example of type description

DEP 19 MLED 220/211/7/830/PD/I/A3 - light fitting with LED source 2x11W; suply voltage 220-240V AC/DC; colour temperature 3000K; prismatic diffuser; type of ceiling - I; emergency lighting 3h.

Drawing 1

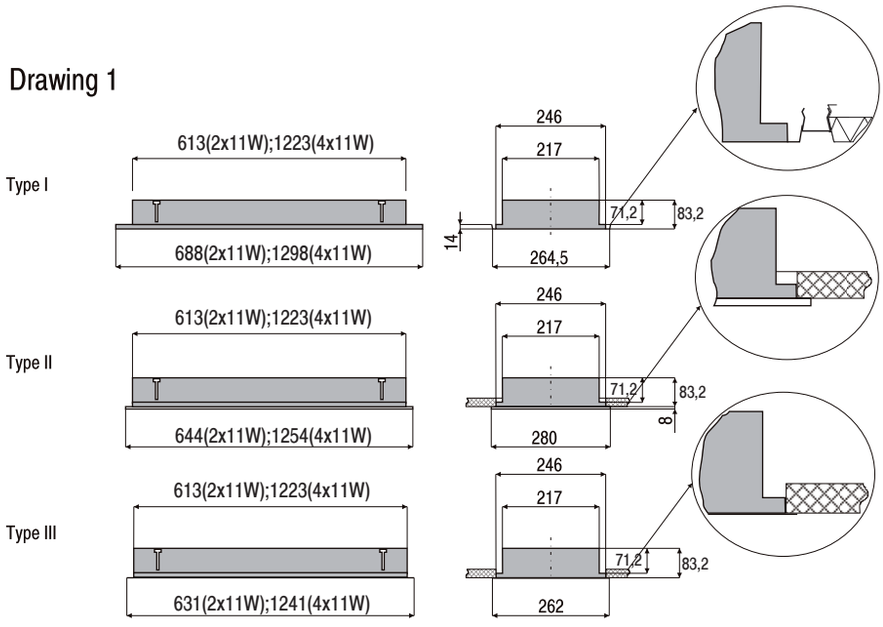

Additional equipment

31-319-9601 Special bracket type C /ordered separately/

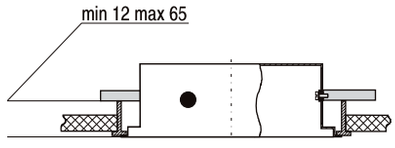

PolamRem

POLAM-REM S.A. 80-531 Gdańsk ul.Sucha 25
tel. +48(0-58) 520-74-00 fax +48(0-58) 343-26-29
www.polam-rem.com.pl; polamrem@polam-rem.com.pl

Technical modification reserved without prior notice

DEP 28

Ceiling Luminaire, recessed, 2x18W/2x36W

POLAM-REM S.A.

IP 44

230V 50Hz

G13

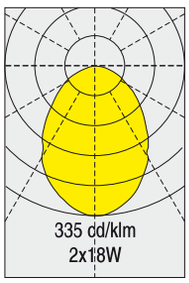

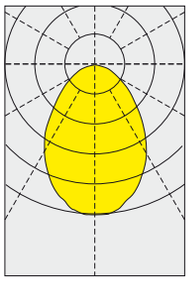

Type	Light source	Light source power / lamp base	Weight
DEP 28 - 2180	fluorescent lamp	2 x 18 W / G 13	4,9 kg
DEP 28 - 2360		2 x 36 W / G 13	6,9 kg

Application
passage ways, cabins, lounges,dining rooms, accomodation areas

Approvals
according to the rules of relevant classification societies, additional IEC

Protection class
IP 44 in conjunction with ceiling

Housing
zinc coated steel, powder coated white

Diffuser
PMMA icecrystal

Lamps (not included)
fluorescent lamp 18W/36W

Electric
flexible wiring, heat resistant up to + 105°Ce entry

Cable entry
2 cable entries ø 20mm

Mounting
4 mounting brackets, cut out
18W: 630 x 236 mm.
36W: 1240 x 236 mm

Electrical connection
see finish section

3.12

OPTIONS

220V 60Hz | 230V 60Hz | 120V 60Hz

240V 50Hz | 24V DC

Electronic Ballast	220V-240V 50Hz-60Hz	220V-240V DC
	Dimmable Electronic Ballast	220V-240V 50Hz-60Hz
Battery Backup System	220V-240V 50Hz-60Hz	1h or 3h

Emergency Lampholder B15d

[mm]

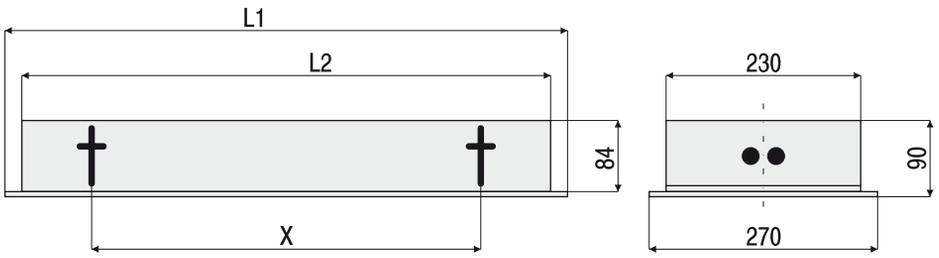

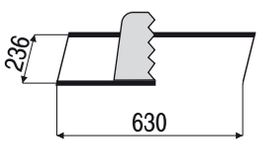

Type	L1	L2	X
DEP 28/2x18W	665	625	460
DEP 28/2x36W	1275	1235	1070

PolamRem

POLAM-REM S.A. 80-531 Gdańsk ul.Sucha 25
tel. +48(0-58) 520-74-00 fax +48(0-58) 343-26-29
www.polam-rem.com.pl; polamrem@polam-rem.com.pl

Technical modification reserved without prior notice

Order Specification

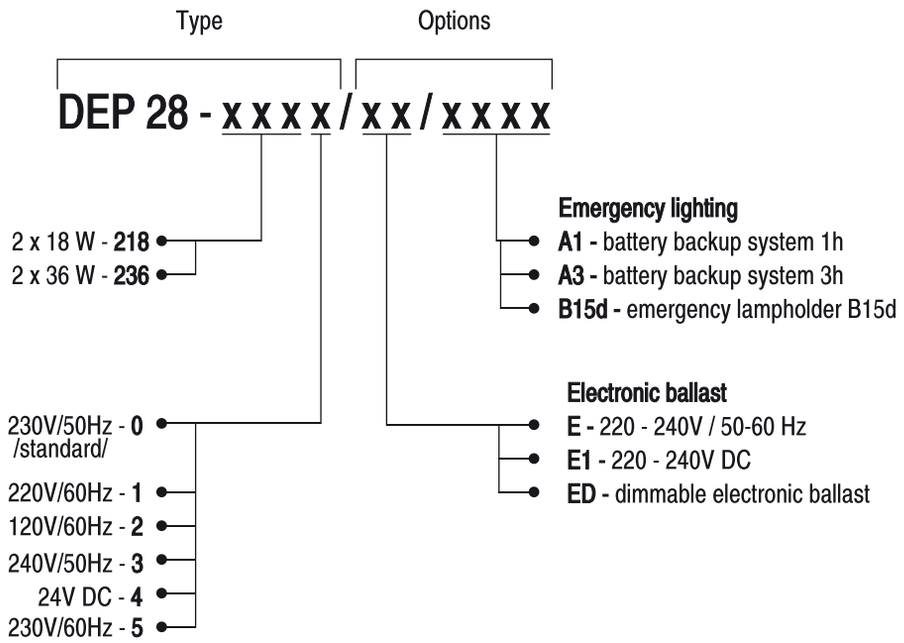

Example of type description

DEP 28 - 2180 light fitting for two fluorescent lamp 18W with socket G13; supply voltage 230V/50Hz;

3.13

Spare parts for ceiling luminaire DEP 28 - 2180

No.	Spare parts	Part-no.
1	Diffuser PMMA, icecrystal	101 00 28218
2	Lampholder G 13 /4 pcs./	014 00 28218
3	Ballast /2 pcs./	032 00 28218
4	Capacitor	021 00 28218

Spare parts for ceiling luminaire DEP 28 - 2360

No.	Spare parts	Part-no.
1	Diffuser PMMA, icecrystal	101 00 28236
2	Lampholder G 13 /4 pcs./	014 00 28236
3	Ballast /2 pcs./	032 00 28236
4	Capacitor	021 00 28236

POLAM-REM S.A. 80-531 Gdańsk ul.Sucha 25
tel. +48(0-58) 520-74-00 fax +48(0-58) 343-26-29
www.polam-rem.com.pl; polamrem@polam-rem.com.pl

Technical modification reserved without prior notice

DEP 28 MLED

Ceiling recessed luminaire, 2x11W / 4x11W LED

POLAM-REM S.A.

IP 44

220-240V AC/DC

LED

Optional diffusers:

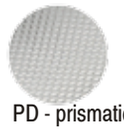

PD - prismatic

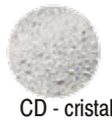

CD - cristal

OD - opal

Type	Wattage	Light Source	Weight	Light flux	Equivalent
DEP 28-MLED-220/211	2 x 11 W	LED	4,9 KG	2 x 1250 lm	2x18W (T8); 2x14W (T5)
DEP 28-MLED-240/411	4 x 11 W	LED	5,2 KG	4 x 1250 lm	2x36W (T8); 2x28W (T5)

Application
Accommodation areas, passage ways, cabins, etc.

Approvals
According to the rules of relevant classification societies, additional IEC

Housing
zinc coated steel, powder painted white

Cover
Prismatic, cristal or opal diffuser

Cable entry
2 cable entries ⌀ 20mm

Mounting
4 mounting brackets, cut out:
2x11W: 630x236 mm
4x11W: 1240x236 mm

Electrical connection
See finish section

3.14

OPTIONS

Battery Backup System 3h

Dimmable

[mm]

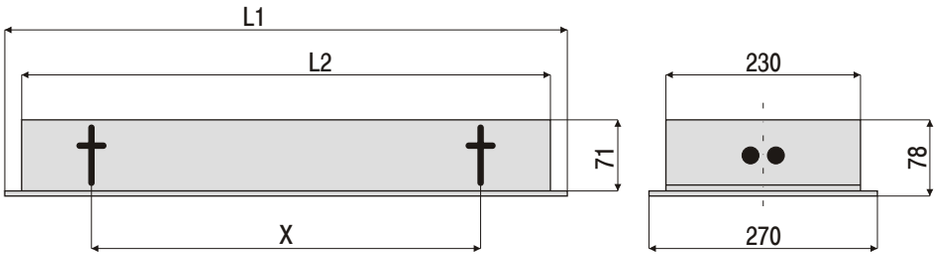

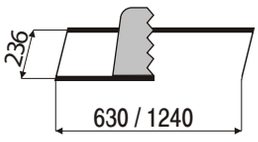

Type	L1	L2	X
DEP 28/2x11W	665	625	460
DEP 28/4x11W	1275	1235	1070

PolamRem

POLAM-REM S.A. 80-531 Gdańsk ul.Sucha 25
tel. +48(0-58) 520-74-00 fax +48(0-58) 343-26-29
www.polam-rem.com.pl; polamrem@polam-rem.com.pl

Technical modification reserved without prior notice

Order Specification

Type | Wattage | Power Supply | Diffuser | Options

DEP 28-MLED - x x x/x x x/ x / x x /x x /x x

- 2 x 11 W - **220/211**
- 4 x 11 W - **240/411**
- 220-240V AC/DC - **7**
- 110-240V AC/DC - **9**
- **PD** - prismatic diffuser
- **CD** - crystal diffuser
- **OD** - opal diffuser
- **ED** - Dimmable version
- **Emergency lighting**
  - **A3** - Battery backup system 3h

Example of type description

DEP 28-MLED 220/211/7/PD - light fitting with LED source 2x11W, supply voltage 220-240V AC/DC, prismatic diffuser

PolamRem

POLAM-REM S.A. 80-531 Gdańsk ul.Sucha 25
tel. +48(0-58) 520-74-00 fax +48(0-58) 343-26-29
www.polam-rem.com.pl; polamrem@polam-rem.com.pl

Technical modification reserved without prior notice

DEP 95

Ceiling Luminaire, recessed, 2x18W/2x36W

POLAM-REM S.A.

IP 20

230V 50Hz

G13

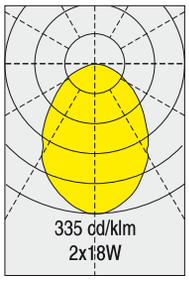

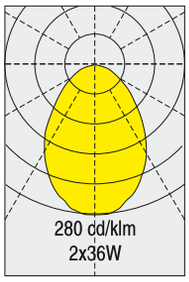

Type	Light source	Light source power / lamp base	Weight
DEP 95 - 2180	fluorescent lamp	2 x 18 W / G 13	4,9 kg
DEP 95 - 2360		2 x 36 W / G 13	8,1 kg

Application
for installation in Dampa ceilings M300 passage ways, cabins, lounges, dining rooms, accomodation areas

Approvals
according to the rules of relevant classification societies, additional IEC

Housing
zinc coated steel, powder coated white

Diffuser
parabolic louvre,silver

Lamps (not included)
fluorescent lamp 18W/36W

Electric
flexible wiring, heat resistant up to +105°

Cable entry
2 or 4 cable inlets cable ø max 11mm

Mounting
2 mounting brackets

Electrical connection
see finish section

3.16

OPTIONS

220V 60Hz	230V 60Hz	120V 60Hz
	240V 50Hz	24V DC
Electronic Ballast	220V-240V 50Hz-60Hz	220V-240V DC
	Dimmable Electronic Ballast	220V-240V 50Hz-60Hz
Battery Backup System	220V-240V 50Hz-60Hz	1h or 3h
Emergency Lampholder B15d	Red Filter	Different Diffuser
		Antimagnetic

[mm]

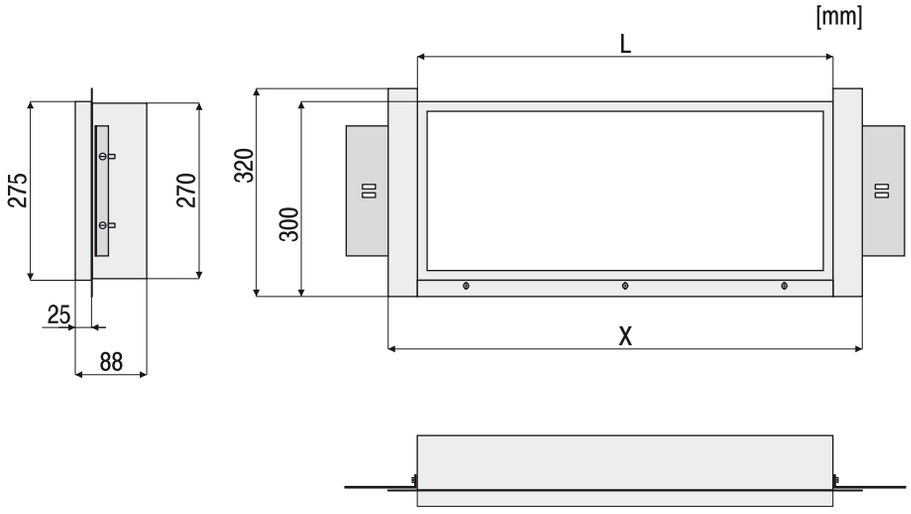

Type	L	X
DEP 95/2x18W	640	730
DEP 95/2x36W	1250	1340

PolamRem

POLAM-REM S.A. 80-531 Gdańsk ul.Sucha 25
tel. +48(0-58) 520-74-00 fax +48(0-58) 343-26-29
www.polam-rem.com.pl; polamrem@polam-rem.com.pl

Technical modification reserved without prior notice

Order Specification

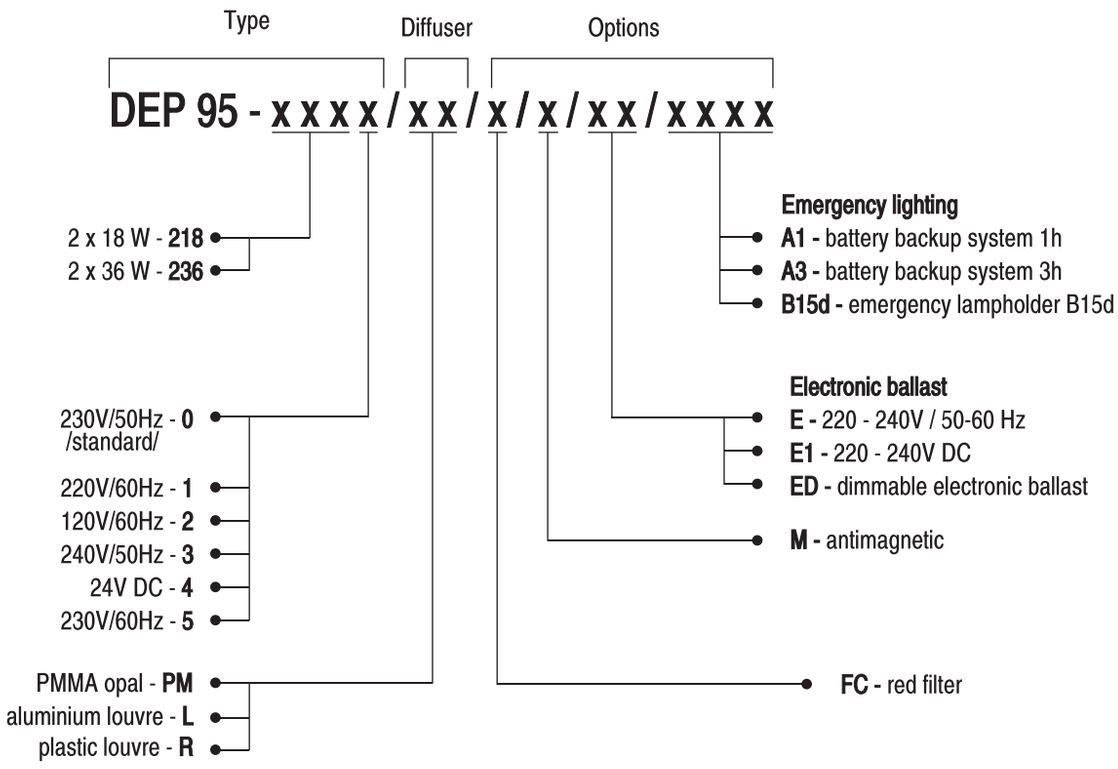

3.17

Example of type description

DEP 95 - 2180/PM light fitting for two fluorescent lamp 18W with socket G13; supply voltage 230V/50Hz; diffuser - PMMA opal

PolamRem

POLAM-REM S.A. 80-531 Gdańsk ul.Sucha 25
tel. +48(0-58) 520-74-00 fax +48(0-58) 343-26-29
www.polam-rem.com.pl; polamrem@polam-rem.com.pl

Technical modification reserved without prior notice

KJP 39

Steplight recessed, for indoor 1x5W/1x7W

POLAM-REM S.A.

IP 20

230V 50Hz

G23

Type	Code	Light source	Light source power / lamp base	Weight
KJP 39 - 1050	639 - 105	tubular compact fluorescent lamp	1 x 5 W / G 23	1,0 kg
KJP 39 - 1070	639 - 107		1 x 7 W / G 23	1,1 kg

Applications
steps, low location illumination
Approvals
according to the rules of relevant classification societies, additional IEC

Housing
zinc coated steel, powder coated black or colours in accordance with RAL
Cover
clear polycarbonate
Lamps (not included)
tubular compact fluorescent lamp 5W/7W

Electric
flexible wiring , heat resistant up to 105°C
Connections
plug and socket /Wieland GST/
Mounting
4 mounting holes, ø 4 mm,
cut out 190 x70 mm
Electrical connection
see finish section

3.18

[mm]

OPTIONS

220V 60Hz

230V 60Hz

120V 60Hz

240V 50Hz

Coloured Filter

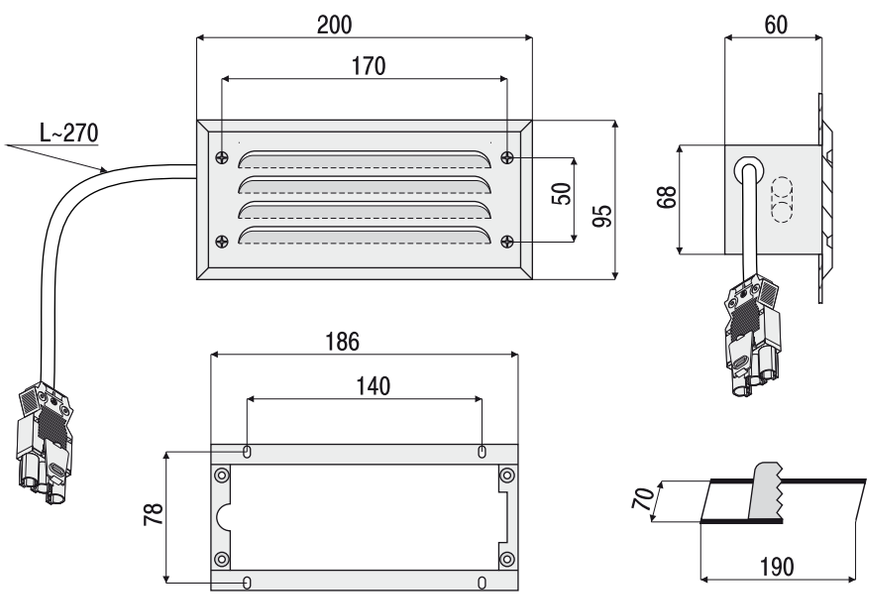

PolamRem

POLAM-REM S.A. 80-531 Gdańsk ul.Sucha 25
tel. +48(0-58) 520-74-00 fax +48(0-58) 343-26-29
www.polam-rem.com.pl; polamrem@polam-rem.com.pl

Technical modification reserved without prior notice

Order Specification

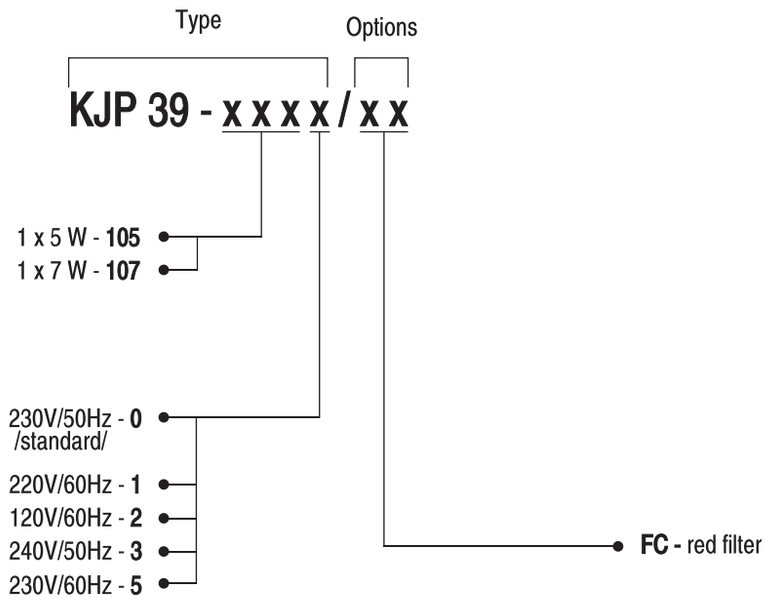

Example of type description

KJP 39 - 2070 light fitting for tubular compact fluorescent lamp 7W with socket G23; supply voltage 230V/50Hz;

Spare parts for step light KJP 39 - 1070

No.	Spare parts	Part-no.
1	Diffuser PC, clear	101 00 39107
2	Lampholder G 23	011 00 39107
3	Ballast	031 00 39107
4	Screen	111 00 39107

POLAM-REM S.A. 80-531 Gdańsk ul.Sucha 25
tel. +48(0-58) 520-74-00 fax +48(0-58) 343-26-29
www.polam-rem.com.pl; polamrem@polam-rem.com.pl

Technical modification reserved without prior notice

KJP 40

Berth Light, recessed, 1x5W/1x7W

POLAM-REM S.A.

IP 20

230V
50Hz

G23

Type	Code	Light source	Light source power / lamp base	Weight
KJP 40 - 1050	640 - 105	tubular compact fluorescent lamp	1 x 5 W / G 23	0,8 kg
KJP 40 - 1070	640 - 107		1 x 7 W / G 23	0,9 kg

Applications
cabins
Approvals
according to the rules of relevant classification societies, additional IEC
Housing
zinc coated steel, powder coated white

Diffuser
polycarbonate, opal
Lamps (not included)
tubular compact fluorescent lamp 5/7W
Electric
flexible wiring , heat resistant up to 105°C, switch 2-pole

Connections
plug and sockets /Wieland GST/
Mounting
4 mounting holes,ø 4 mm, cut out 190 x70 mm
Electrical connection
see finish section

3.20

OPTIONS

220V 60Hz | 230V 60Hz | 120V 60Hz | 240V 50Hz

[mm]

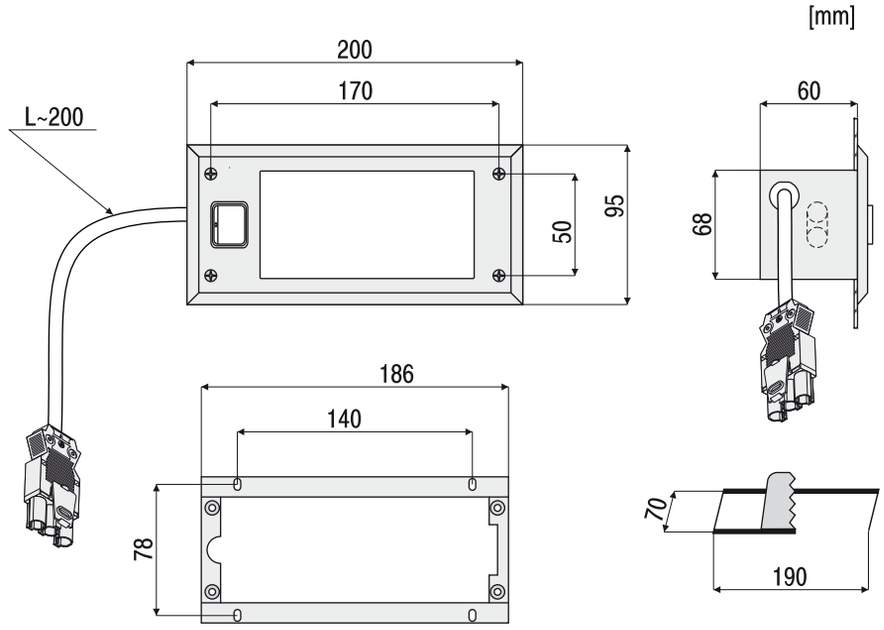

PolamRem
POLAM-REM S.A. 80-531 Gdańsk ul.Sucha 25
tel. +48(0-58) 520-74-00 fax +48(0-58) 343-26-29
www.polam-rem.com.pl; polamrem@polam-rem.com.pl

Technical modification reserved without prior notice

Order Specification

Type

KJP 40 - x x x x

1 x 5 W - **105**
1 x 7 W - **107**

230V/50Hz - **0**
/standard/
220V/60Hz - **1**
120V/60Hz - **2**
240V/50Hz - **3**
230V/60Hz - **5**

Example of type description

KJP 40 - 1070 light fitting for tubular compact fluorescent lamp 7W with socket G23; supply voltage 230V/50Hz;

PolamRem

POLAM-REM S.A. 80-531 Gdańsk ul.Sucha 25
tel. +48(0-58) 520-74-00 fax +48(0-58) 343-26-29
www.polam-rem.com.pl; polamrem@polam-rem.com.pl

Technical modification reserved without prior notice

Diagrams Electrical Connection for Wall and Ceiling Luminaires, recessed

POLAM-REM S.A.

connection with switch

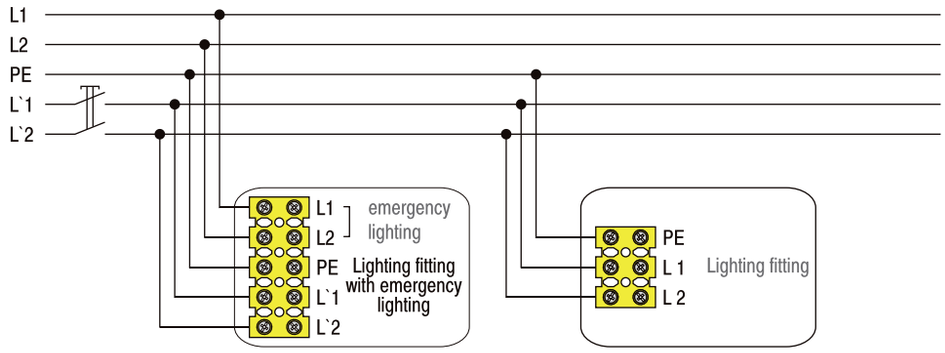

connection without switch

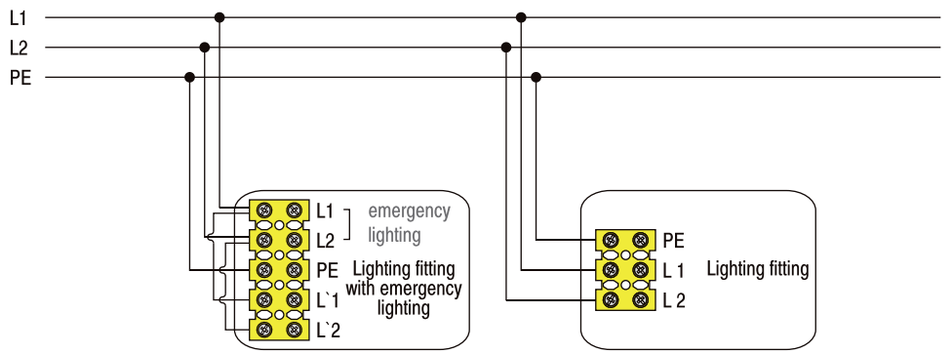

3.18

connection with emergency lampholder B15d

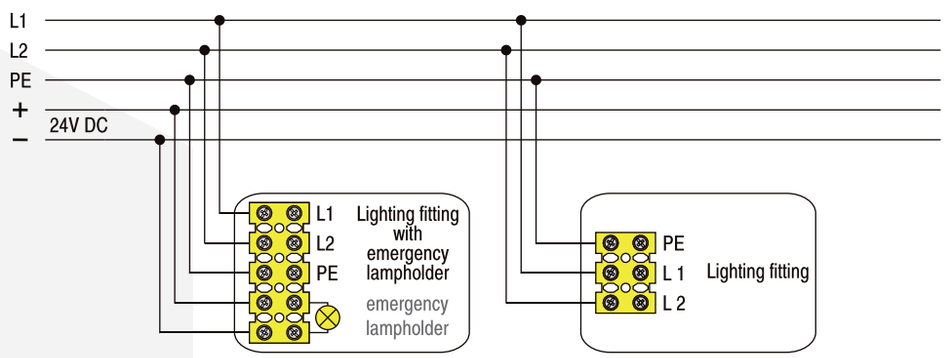

connection with dimmable

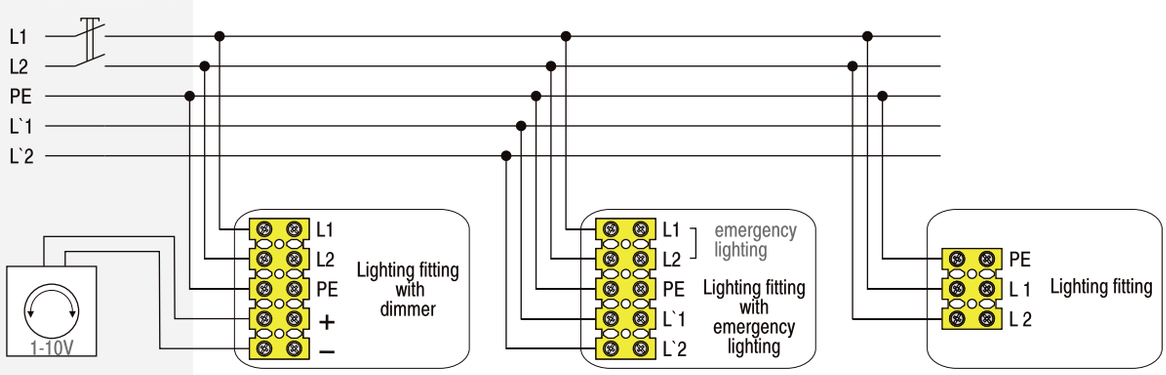

PolamRem

POLAM-REM S.A. 80-531 Gdańsk ul.Sucha 25
tel. +48(0-58) 520-74-00 fax +48(0-58) 343-26-29
www.polam-rem.com.pl; polamrem@polam-rem.com.pl

Technical modification reserved without prior notice

POLAM-REM S.A.

Wall and Ceiling Luminaires, surface

DAP 16	4.01 - 4.02
DAP 23	4.03 - 4.04
DAP 30	4.05 - 4.06
ELP 10	4.07 - 4.08
ELP 12	4.09 - 4.10
ELP 33	4.11 - 4.12
KJP 27	4.13 - 4.14
KJP 27 LED	4.15 - 4.16
KJP 41	4.17 - 4.18

PolamRem

POLAM-REM S.A. 80-531 Gdańsk ul.Sucha 25
tel. +48(0-58) 520-74-00 fax +48(0-58) 343-26-29
www.polam-rem.com.pl; polamrem@polam-rem.com.pl

Technical modification reserved without prior notice

DAP 16

Ceiling Luminaire, surface, 2x18W/2x36W

POLAM-REM S.A.

IP 30

230V 50Hz

G13

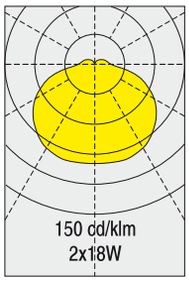

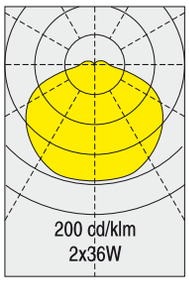

Type	Light source	Light source power / lamp base	Weight
DAP 16 - 2180	fluorescent lamp	2 x 18 W / G 13	3,3 kg
DAP 16 - 2360		2 x 36 W / G 13	6,3 kg

Application
passage ways, cabins, lounges, dining rooms, accomodation areas
Approvals
according to the rules of relevant classification societies, additional IEC
Housing
zinc coated steel, powder coated white

Diffuser
polycarbonate, opal
Lamps (not included)
fluorescent lamp 18W/36W
Electric
flexible wiring
heat resistant up to +105°C

Cable entry
4 inlets, cable ø max 11 mm
or cable glands PG 13,5 for IP 44
Mounting
4 mounting holes ø 5,5 mm
Electrical connection
see finish section

4.01

[mm]

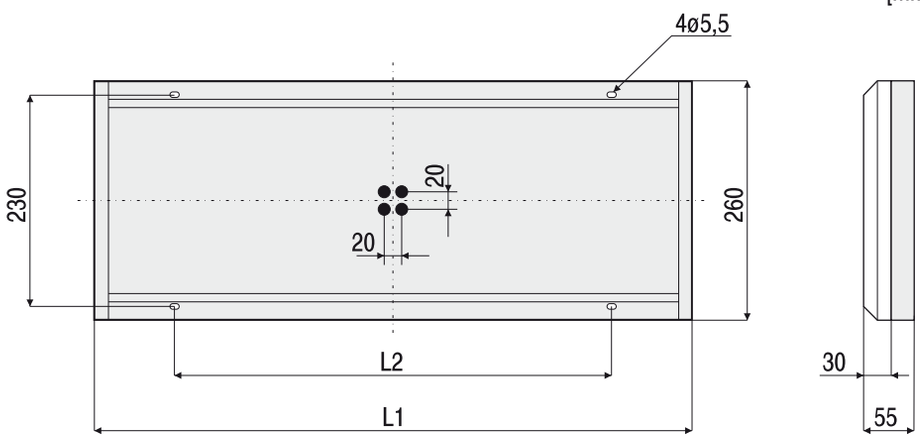

Type	L1	L2
DAP 16/2x18W	650	475
DAP 16/2x36W	1265	967

OPTIONS

220V 60Hz | 230V 60Hz | 120V 60Hz

240V 50Hz | 24V DC

Electronic Ballast	220V-240V 50Hz-60Hz	220V-240V DC
	Dimmable Electronic Ballast	220V-240V 50Hz-60Hz
Battery Backup System	220V-240V 50Hz-60Hz	1h or 3h

Emergency Lampholder B15d

IP 44

PolamRem

POLAM-REM S.A. 80-531 Gdańsk ul.Sucha 25
tel. +48(0-58) 520-74-00 fax +48(0-58) 343-26-29
www.polam-rem.com.pl; polamrem@polam-rem.com.pl

Technical modification reserved without prior notice

Order Specification

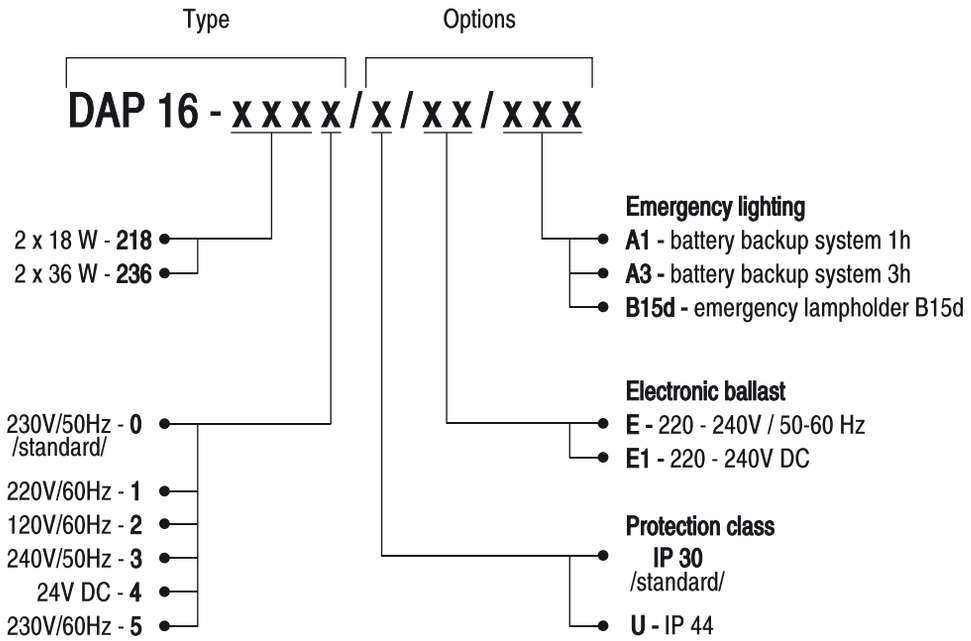

Example of type description

DAP 16 - 2180/U light fitting for two fluorescent lamp 18W with socket G13; supply voltage 230V/50Hz; protection class - IP 44

Spare parts for ceiling luminaire DAP 16 - 2180

No.	Spare parts	Part-no.
1	Diffuser PC, opal	101 00 86218
2	Lampholder G 13 /4 pcs./	014 00 86218
3	Ballast /2 pcs./	032 00 86218
4	Capacitor	021 00 86218

Spare parts for ceiling luminaire DAP 16 - 2360

No.	Spare parts	Part-no.
1	Diffuser PC, opal	101 00 86236
2	Lampholder G 13 /4 pcs./	014 00 86236
3	Ballast /2 pcs./	032 00 86236
4	Capacitor	021 00 86236

POLAM-REM S.A. 80-531 Gdańsk ul.Sucha 25
tel. +48(0-58) 520-74-00 fax +48(0-58) 343-26-29
www.polam-rem.com.pl; polamrem@polam-rem.com.pl

Technical modification reserved without prior notice

DAP 23

Ceiling Luminaire, surface, 2x18W/2x36W

POLAM-REM S.A.

IP 30

230V 50Hz

G13

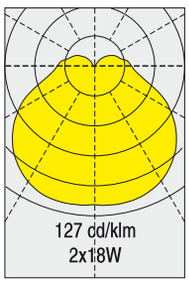

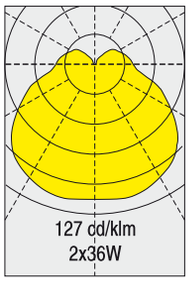

Type	Code	Light source	Light source power / lamp base	Weight
DAP 23 - 2180	323 - 218	fluorescent lamp	2 x 18 W / G 13	3,5 kg
DAP 23 - 2360	323 - 236		2 x 36 W / G 13	5,7 kg

Application
passage ways, cabins, lounges, dining rooms, accomodation areas
Approvals
according to the rules of relevant classification societies, additional IEC

Housing
zinc coated steel, powder coated white
Diffuser
polycarbonate opal
Lamps (not included)
fluorescent lamp 18W/36W

Electric
flexible wiring heat resistant up to +105°C
Cable entry
4 inlets, cable ø max 11 mm
Mounting
4 mounting holes ø 5,5 mm
Electrical connection
see finish section

4.03

[mm]

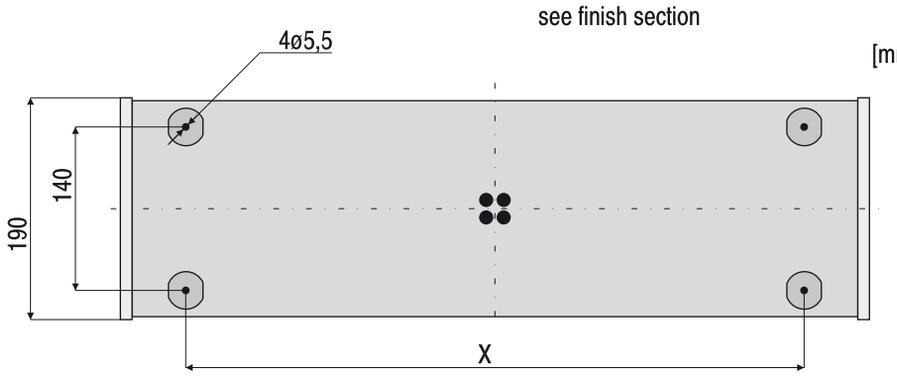

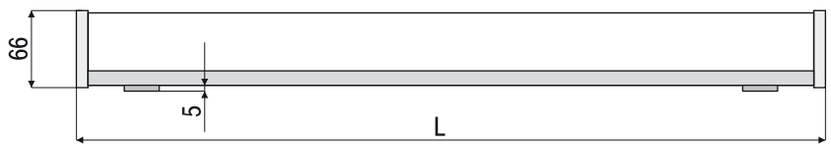

Type	L	X
DAP 23/2x18W	642	530
DAP 23/2x36W	1252	950

OPTIONS

220V 60Hz | 230V 60Hz | 120V 60Hz

240V 50Hz | 24V DC

Electronic Ballast	220V-240V 50Hz-60Hz	220V-240V DC
	Dimmable Electronic Ballast	220V-240V 50Hz-60Hz
Battery Backup System	220V-240V 50Hz-60Hz	1h or 3h

Emergency Lampholder B15d

PolamRem
POLAM-REM S.A. 80-531 Gdańsk ul.Sucha 25
tel. +48(0-58) 520-74-00 fax +48(0-58) 343-26-29
www.polam-rem.com.pl; polamrem@polam-rem.com.pl

Technical modification reserved without prior notice

Order Specification

Type | Options

DAP 23 - x x x x / x x / x x x

2 x 18 W - **218**
2 x 36 W - **236**

230V/50Hz - **0** /standard/
220V/60Hz - **1**
120V/60Hz - **2**
240V/50Hz - **3**
24V DC - **4**
230V/60Hz - **5**

Emergency lighting
- **A1 -** battery backup system 1h
- **A3 -** battery backup system 3h
- **B15d -** emergency lampholder B15d

Electronic ballast
- **E -** 220 - 240V / 50-60 Hz
- **E1 -** 220 - 240V DC
- **ED -** dimmable electronic ballast

Example of type description

DAP 23 - 2180 light fitting for two fluorescent lamp 18W with socket G13; supply voltage 230V/50Hz;

Spare parts for ceiling luminaire DAP 23 - 2180

No.	Spare parts	Part-no.
1	Diffuser PC, opal	101 00 23218
2	Lampholder G 13 /4 pcs./	014 00 23218
3	Ballast /2 pcs./	032 00 23218
4	Capacitor	021 00 23218
5	End caps /cpl./	302 00 23218

Spare parts for ceiling luminaire DAP 23 - 2360

No.	Spare parts	Part-no.
1	Diffuser PC, opal	101 00 23236
2	Lampholder G 13 /4 pcs./	014 00 23236
3	Ballast /2 pcs./	032 00 23236
4	Capacitor	021 00 23236
5	End caps /cpl./	302 00 23236

POLAM-REM S.A. 80-531 Gdańsk ul.Sucha 25
tel. +48(0-58) 520-74-00 fax +48(0-58) 343-26-29
www.polam-rem.com.pl; polamrem@polam-rem.com.pl

Technical modification reserved without prior notice

DAP 30

Ceiling Luminaire, surface, 2x9W/2x11W/2x18W

POLAM-REM S.A.

IP 54

230V
50Hz

2G7

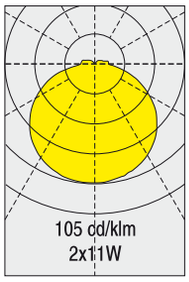

Type	Light source	Light source power / lamp base	Weight
DAP 30 - 2090	tubular compact fluorescent lamp	2 x 9 W /2G7	1,8 kg
DAP 30 - 2110		2 x 11 W /2G7	2,0 kg

Application
cabins, lounges, dinning rooms,acomodation areas, bath rooms

Approvals
according to the rules of relevant classification societies, additional IEC

Housing
zinc coated steel, powder coated white

Diffuser
polycarbonate, opal

Lamps (not included)
tubular compact fluorescent lamp 9W/11W/18W

Electric
flexible wiring, heat resistant up to +105°C

Cable entry
max 4 inlets, cable ø max 13 mm

Mounting
4 mounting holes, ø 4 mm

Electrical connection
see finish section

4.05

[mm]

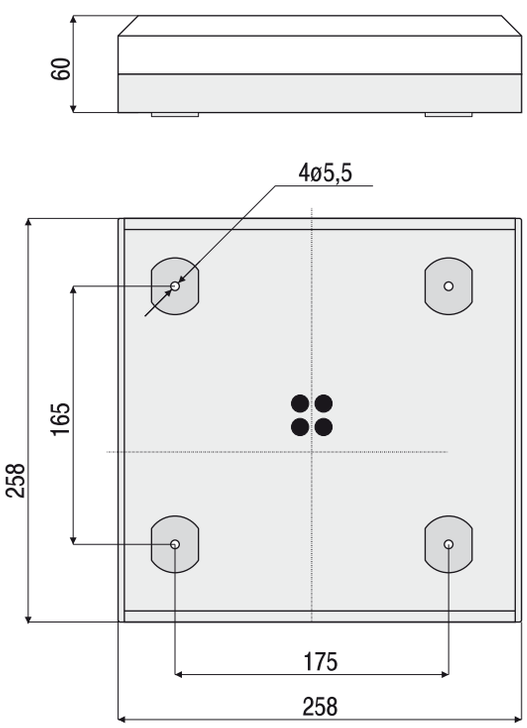

OPTIONS

120V
60Hz

24V DC

Battery Backup System 220V-240V 50Hz-60Hz 1h or 3h

Emergency Lampholder B15d

PolamRem

POLAM-REM S.A. 80-531 Gdańsk ul.Sucha 25
tel. +48(0-58) 520-74-00 fax +48(0-58) 343-26-29
www.polam-rem.com.pl; polamrem@polam-rem.com.pl

Technical modification reserved without prior notice

Order Specification

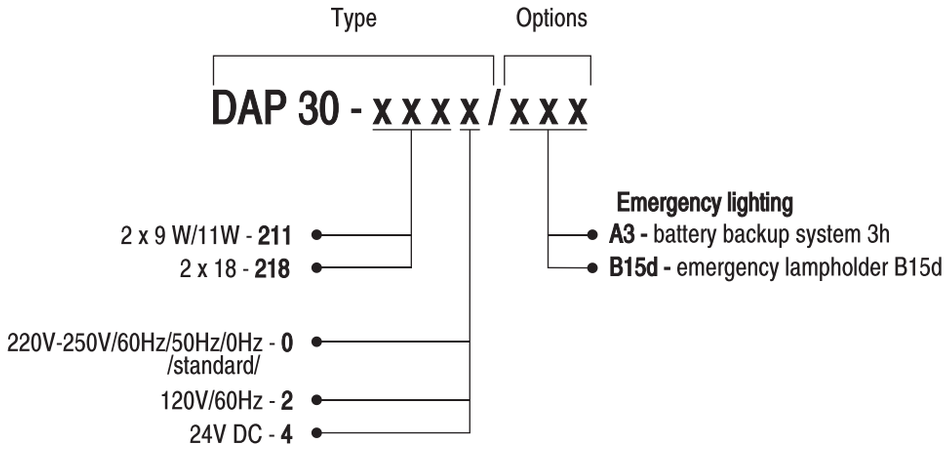

Example of type description

DAP 30 - 2110 light fitting for two fluorescent lamp 11W with socket 2G7; supply voltage 220V-250V/60Hz/50Hz/0Hz

Spare parts for ceiling luminaire DAP 30 - 2...

No.	Spare parts	Part-no.
1	Diffuser PC, opal	101 00 30000
2	Lampholder 2G7 /2 pcs./	012 00 35009
3	Lampholder 2G11 /2 pcs./	031 00 35211
4	Ballast /1 x 11W/ /2 pcs./	031 00 35211
5	Ballast /1 x 18W/ /2 pcs./	031 00 35218

PolamRem

POLAM-REM S.A. 80-531 Gdańsk ul.Sucha 25
tel. +48(0-58) 520-74-00 fax +48(0-58) 343-26-29
www.polam-rem.com.pl; polamrem@polam-rem.com.pl

Technical modification reserved without prior notice

ELP 10

Batten Luminaire, 1x18W/2x18W/1x36W/ 2x36W/1x58W/2x58W

POLAM-REM S.A.

IP 20

230V 50Hz

G13

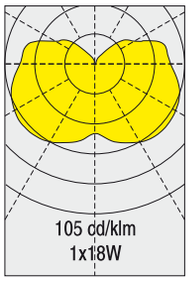

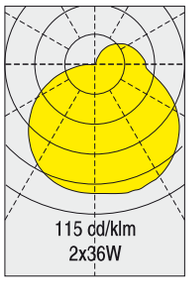

Type	Light source	Light source power / lamp base	Weight
ELP 10 - 1180	fluorescent lamp	1 x 18 W / G 13	1,2 kg
ELP 10 - 2180		2 x 18 W / G 13	1,7 kg
ELP 10 - 1360		1 x 36 W / G 13	1,8 kg
ELP 10 - 2360		2 x 36 W / G 13	2,4 kg
ELP 10 - 1580		1 x 58 W / G 13	2,8 kg
ELP 10 - 2580		2 x 58 W / G 13	3,3 kg

Application
passage ways, cabins, shops
Approvals
according to the rules of relevant classification societies, additional IEC
Housing
zinc coated steel, powder coated white

Lamps (not included)
fluorescent lamp 18W/36W/58W
Electric
flexible wiring
heat resistant up to +105°C

Cable entry
2 inlets, cable ø max 11 mm
Mounting
2 mounting holes ø 5 mm
Electrical connection
see finish section

4.07

[mm]

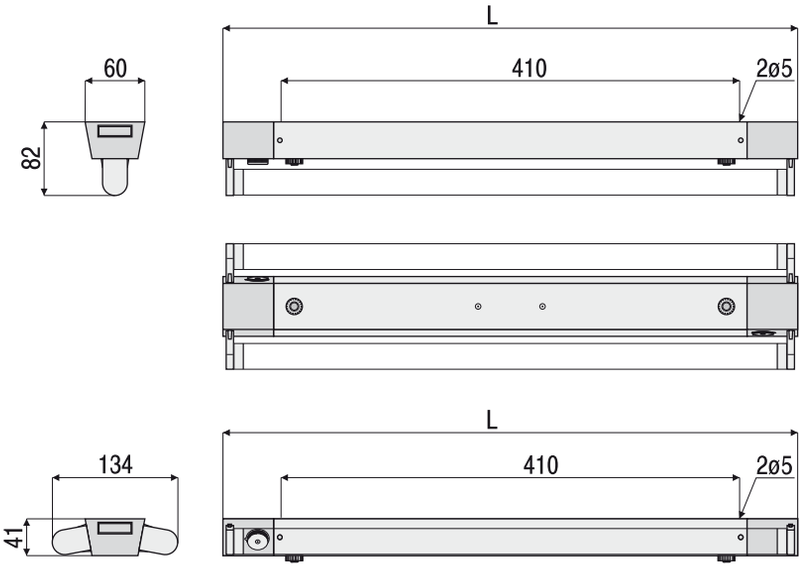

Type	L
ELP 10/1x18, 2x18W	624
ELP 10/1x36, 2x36W	1233
ELP 10/1x58, 2x58W	1534

OPTIONS

220V 60Hz	230V 60Hz	120V 60Hz
		240V 50Hz

Electronic Ballast	220V-240V 50Hz-60Hz	220V-240V DC
	Dimmable Electronic Ballast	220V-240V 50Hz-60Hz
Battery Backup System	220V-240V 50Hz-60Hz	1h or 3h

PolamRem
POLAM-REM S.A. 80-531 Gdańsk ul.Sucha 25
tel. +48(0-58) 520-74-00 fax +48(0-58) 343-26-29
www.polam-rem.com.pl; polamrem@polam-rem.com.pl

Technical modification reserved without prior notice

Order Specification

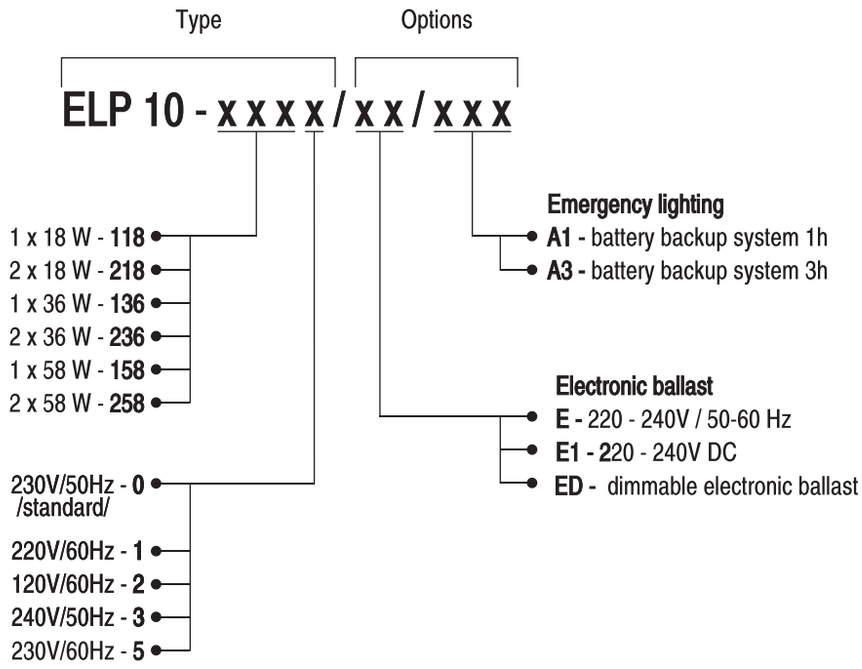

Example of type description

ELP 10 - 1180 light fitting for one fluorescent lamp 18W with socket G13; supply voltage 230V/50Hz

Spare parts for batten luminaire ELP 10 - 1180

No.	Spare parts	Part-no.
1	Lampholder G 13 /4 pcs./	012 00 10118
2	Ballast	031 00 10118
3	Capacitor	021 00 10118

Spare parts for batten luminaire EL 10 - 1360

No.	Spare parts	Part-no.
1	Lampholder G 13 /2 pcs./	012 00 10136
2	Ballast	031 00 10136
3	Capacitor	021 00 10136

POLAM-REM S.A. 80-531 Gdańsk ul.Sucha 25
tel. +48(0-58) 520-74-00 fax +48(0-58) 343-26-29
www.polam-rem.com.pl; polamrem@polam-rem.com.pl

Technical modification reserved without prior notice

ELP 12

Batten Luminaire, 1x15W/1x18W/1x30W/1x36W

POLAM-REM S.A.

IP 20

230V 50Hz

G13

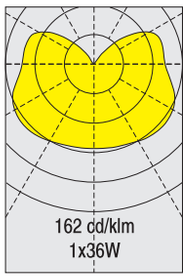

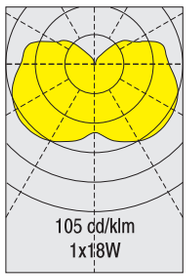

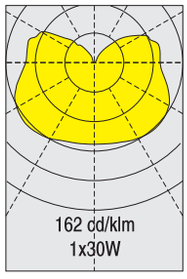

Type	Light source	Light source power / lamp base	Weight
ELP 12 - 1150	fluorescent lamp	1 x 15 W / G 13	0,9 kg
ELP 12 - 1180		1 x 18 W / G 13	1,0 kg
ELP 12 - 1300		1 x 30 W / G 13	1,1 kg
ELP 12 - 1360		1 x 36 W / G 13	1,2 kg

Application
passage ways, cabins, shops

Approvals
according to the rules of relevant classification societies, additional IEC

Housing
zinc coated steel, powder coated white

Lamps (not included)
fluorescent lamp 15W/18W/30W/36W

Electric
flexible wiring
heat resistant up to +105°C

Cable entry
2 inlets, cable ø max 11 mm

Mounting
2 mounting holes ø 5 mm

Electrical connection
see finish section

4.09

[mm]

OPTIONS

220V 60Hz | 230V 60Hz | 120V 60Hz | 240V 50Hz

Electronic Ballast	220V-240V 50Hz-60Hz	220V-240V DC

Diffuser Polycarbonate

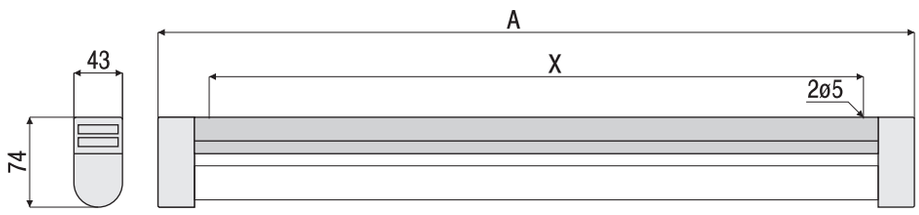

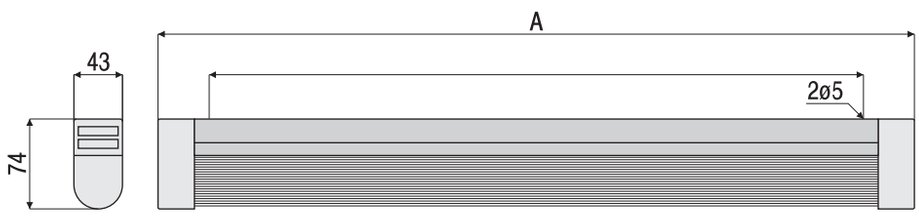

Type	A	X
ELP 12/1x15W	471	404
ELP 12/1x18W	623	559
ELP 12/1x30W	928	864
ELP 12/1x36W	1232	1169
ELP 12/1x58W	1532	1468

PolamRem

POLAM-REM S.A. 80-531 Gdańsk ul.Sucha 25
tel. +48(0-58) 520-74-00 fax +48(0-58) 343-26-29
www.polam-rem.com.pl; polamrem@polam-rem.com.pl

Technical modification reserved without prior notice

Order Specification

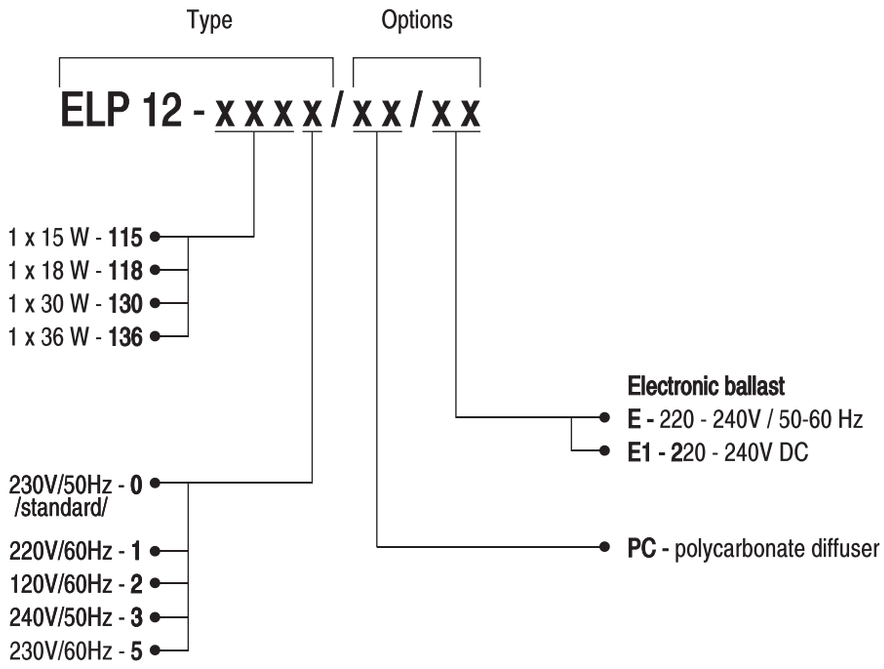

Example of type description

ELP 12 - 1180 light fitting for one fluorescent lamp 18W with socket G13; supply voltage 230V/50Hz

Spare parts for batten luminaire ELP 12 - 1180

No.	Spare parts	Part-no.
1	Lampholder G 13 /4 pcs./	012 00 12118
2	Ballast	031 00 12118
3	Capacitor	021 00 12118

Spare parts for batten luminaire ELP 12 - 1360

No.	Spare parts	Part-no.
1	Lampholder G 13 /2 pcs./	012 00 12136
2	Ballast	031 00 12136
3	Capacitor	021 00 12136

POLAM-REM S.A. 80-531 Gdańsk ul.Sucha 25
tel. +48(0-58) 520-74-00 fax +48(0-58) 343-26-29
www.polam-rem.com.pl; polamrem@polam-rem.com.pl

Technical modification reserved without prior notice

ELP 33

Cornice Luminaire, surface, 1x18W/2x18W; 1x36W/2x36W

POLAM-REM S.A.

IP 30

230V 50Hz

G13

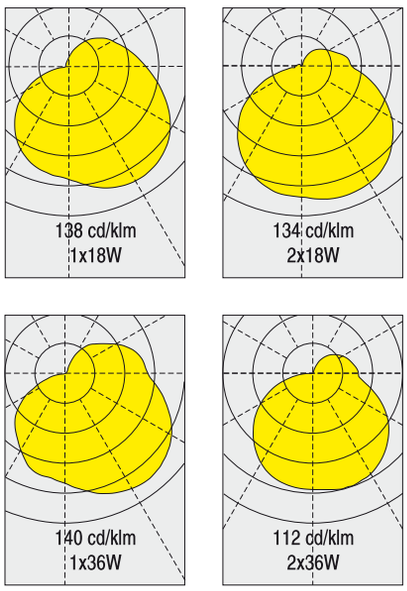

Type	Light source	Light source power / lamp base	Weight
ELP 33 - 1180	fluorescent lamp	1 x 18 W / G 13	3,0 kg
ELP 33 - 2180		2 x 18 W / G 13	3,4 kg
ELP 33 - 1360		1 x 36 W / G 13	4,2 kg
ELP 33 - 2360		2 x 36 W / G 13	4,7 kg

Application
passage ways, cabins
Approvals
according to the rules of relevant classification societies, additional IEC

Housing
zinc coated steel, powder coated white
Diffuser
polycarbonate opal
Lamps (not included)
fluorescent lamp 18W/36W
Electric
flexible wiring, heat resistant up to +105°C

Cable entry
4 inlets, cable ø max 11 mm
Mounting
4 mounting holes, ø 5.5 mm
Electrical connection
see finish section

4.11

[mm]

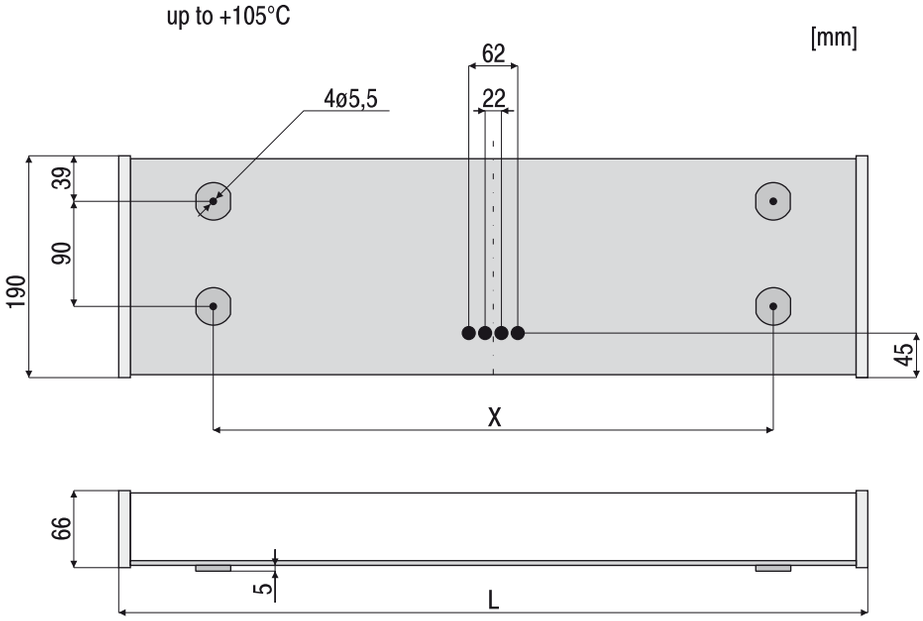

Type	L	X
ELP 33/2x18W	642	480
ELP 33/2x36W	1252	967

OPTIONS

220V 60Hz | 230V 60Hz | 120V 60Hz | 240V 50Hz

Electronic Ballast	220V-240V 50Hz-60Hz	220V-240V DC
	Dimmable Electronic Ballast	220V-240V 50Hz-60Hz
Battery Backup System	220V-240V 50Hz-60Hz	1h or 3h
		Emergency Lampholder B15d
	2-Pole Switch	Crystal Diffuser

PolamRem
POLAM-REM S.A. 80-531 Gdańsk ul.Sucha 25
tel. +48(0-58) 520-74-00 fax +48(0-58) 343-26-29
www.polam-rem.com.pl; polamrem@polam-rem.com.pl

Technical modification reserved without prior notice

Order Specification

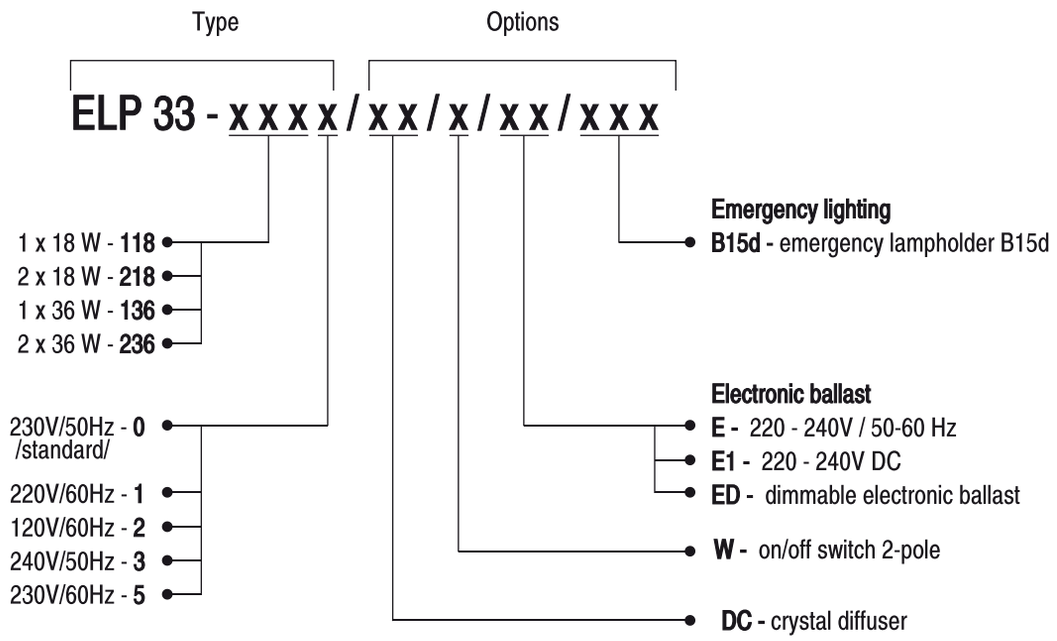

Example of type description

ELP 33 - 2180 light fitting for two fluorescent lamp 18W with socket G13; supply voltage 230V/50Hz;

Spare parts for ceiling luminaire ELP 33 - 2180

No.	Spare parts	Part-no.
1	Diffuser PC, opal	101 00 33218
2	Lampholder G 13 /4 pcs./	014 00 33218
3	Ballast /2 pcs./	032 00 33218
4	Capacitor	021 00 33218
5	Switch 2-pole	051 00 33218
6	End caps /cpl./	302 00 33218

Spare parts for ceiling luminaire ELP 33 - 2360

No.	Spare parts	Part-no.
1	Diffuser PC, opal	101 00 33236
2	Lampholder G 13 /4 pcs./	014 00 33236
3	Ballast /2 pcs./	032 00 33236
4	Capacitor	021 00 33236
5	Switch 2-pole	051 00 33236
6	End caps /cpl./	302 00 33236

POLAM-REM S.A. 80-531 Gdańsk ul.Sucha 25
tel. +48(0-58) 520-74-00 fax +48(0-58) 343-26-29
www.polam-rem.com.pl; polamrem@polam-rem.com.pl

Technical modification reserved without prior notice

KJP 27

Mirror Luminaire, surface
1x15W/1x18W/1x26W

POLAM-REM S.A.

IP 44

230V
50Hz

G13

G24d-3

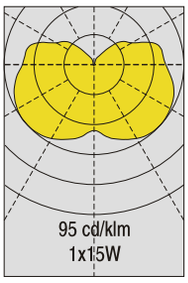

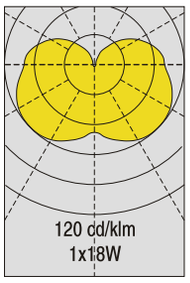

Type	Light source	Light source power / lamp base	Weight
KJP 27 - 1150	fluorescent lamp	1 x 15 W / G 13	1,8 kg
KJP 27 - 1180		1 x 18 W / G 13	2,0 kg
KJP 27 - 1260	tubular compact fluorescent lamp	1 x 26 W / G24d3	2,2 kg

Application
cabins, shower rooms, toilets, accomodation areas
Approvals
according to the rules of relevant classification societies, additional IEC

Housing
zinc coated steel, powder coated white
Diffuser
PC, opal
Lamps (not included)
tubular compact fluorescent lamp, fluorescent lamp
Cable entry
2 inlets, cable max ø 11 mm

Electric
flexible wiring, heat resistant up to +105°C
Mounting
2 mounting holes, ø 6 mm
Electrical connection
see finish section

4.13

OPTIONS

220-230V 60Hz

120V 60Hz

240V 50Hz

Electronic Ballast 220-240V AC/DC

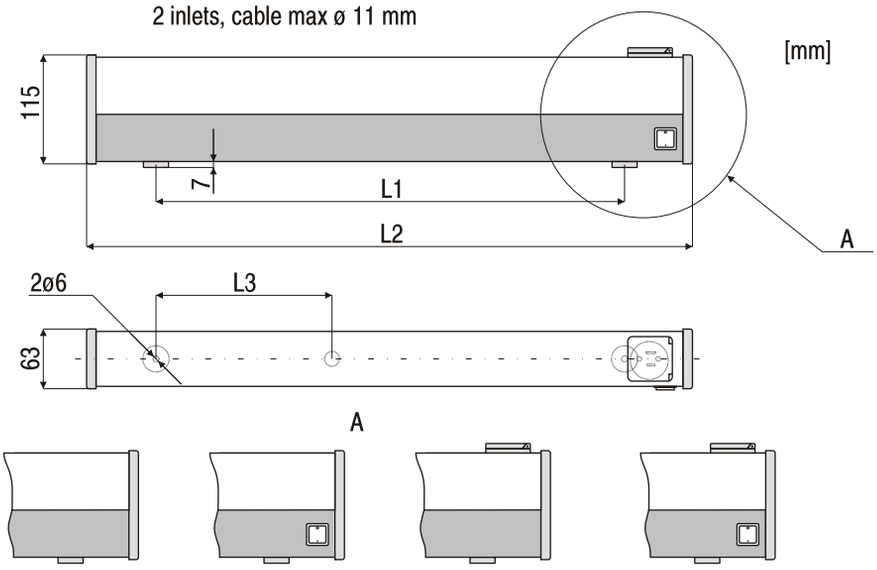

Type	L1	L2	L3
KJP 27 1x26W	168	320	45
KJP 27 1x15W	360	500	200
KJP 27 1x18W	495	640	170

PolamRem

POLAM-REM S.A. 80-531 Gdańsk ul.Sucha 25
tel. +48(0-58) 520-74-00 fax +48(0-58) 343-26-29
www.polam-rem.com.pl; polamrem@polam-rem.com.pl

Technical modification reserved without prior notice

Order Specification

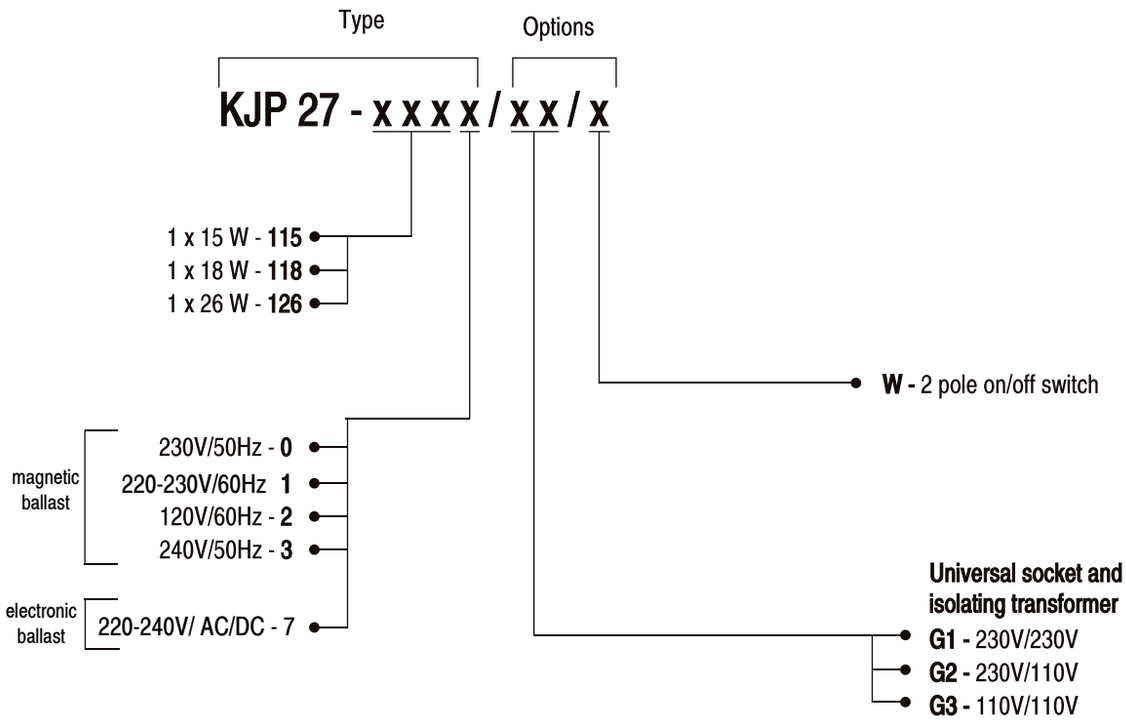

Example of type description

KJP 27 - 1180/G2 light fitting for one fluorescent lamp 18W with socket G13; supply voltage 230V/50Hz; universal socket - 230V and 110V; isolating transformer - 230V/110V

PolamRem

POLAM-REM S.A. 80-531 Gdańsk ul.Sucha 25
tel. +48(0-58) 520-74-00 fax +48(0-58) 343-26-29
www.polam-rem.com.pl; polamrem@polam-rem.com.pl

Technical modification reserved without prior notice

KJP 27 LED

Mirror and bed luminaire, surface 1x11W

POLAM-REM S.A.

IP 44

220-240V AC/DC

LED

Type	Wattage	Light source	Weight	Light flux	Equivalent
KJP 27-MLED220/111/...	1 x 11 W	LED panel	2,0 kg	1 x 1250 lm	1x14W (T5); 1x18W (T8)

Application
cabins, shower rooms, toilets, accomodation areas

Approvals
according to the rules of relevant classification societies, additional IEC

Housing
zinc coated steel, powder coated white

Diffuser
PC, opal

Cable entry
2 inlets, cable max ø 11 mm

Electric
flexible wiring, heat resistant up to +105°C

Mounting
2 mounting holes, ø 6 mm

Electrical connection
see finish section

4.15

OPTIONS

110V-240V AC/DC

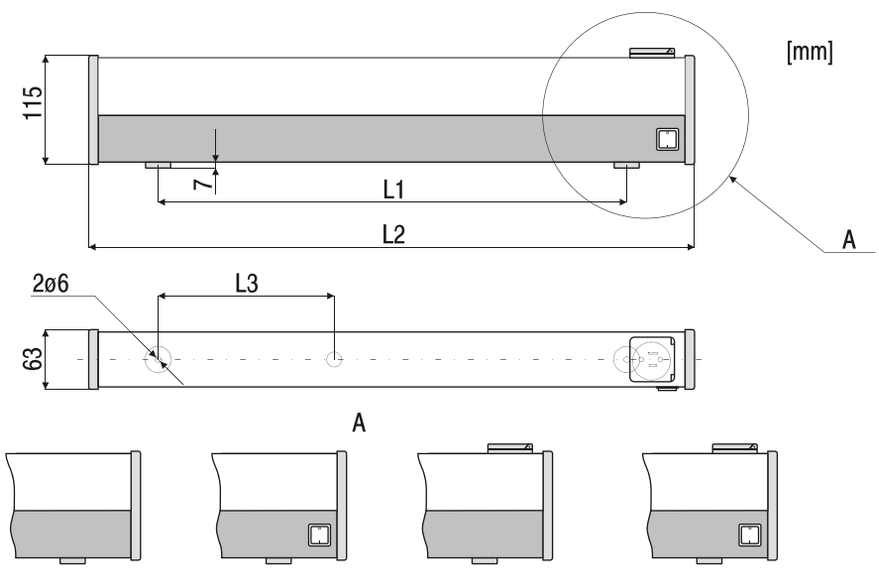

Type	L1	L2	L3
KJP 27 1x11W LED	495	640	217

PolamRem

POLAM-REM S.A. 80-531 Gdańsk ul.Sucha 25
tel. +48(0-58) 520-74-00 fax +48(0-58) 343-26-29
www.polam-rem.com.pl; polamrem@polam-rem.com.pl

Technical modification reserved without prior notice

Order Specification

KJP 27-MLED / xxx/xxx / x / xxx / xx /x

- Power: xxx/xxx
  - 1x11W - **220/111**
- Supply Voltage: x
  - 220-240V AC/DC - **7**
  - 110-240V AC/DC - **8**
- Colour Temp.: xxx
  - 3000K - **830**
  - 4000K - **840**
- Options: xx
  - **Universal socket and isolating transformer**
  - **G1 -** 230V/230V
  - **G2 -** 230V/110V
  - **G3 -** 110V/110V
- Options: x
  - **W** - 2 pole on/off switch

Example of type description

KJP 27 - MLED/220/111/7/830/G3/W - light fitting with LED panel 1x11W; supply voltage 220-240V AC/DC; colour temperature 3000K;universal socket 110V/110V; 2 pole switch

PolamRem

POLAM-REM S.A. 80-531 Gdańsk ul.Sucha 25
tel. +48(0-58) 520-74-00 fax +48(0-58) 343-26-29
www.polam-rem.com.pl; polamrem@polam-rem.com.pl

Technical modification reserved without prior notice

KJP 41

Berth Light, surface, 8W/9W/11W

POLAM-REM S.A.

IP 30

230V 50Hz

G23

G5

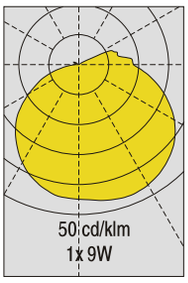

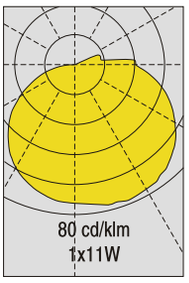

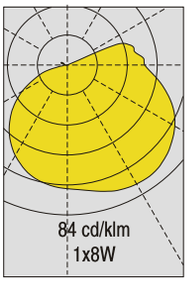

Type	Light source	Light source power / lamp base	Weight
KJP 41 - 1090	tubular compact fluorescent lamp	1 x 5/7/9 W / G23	0,9 kg
KJP 41 - 1110		1 x 11 W / G 23	1,2 kg
KJP 41 - 1080	fluorescent lamp	1 x 8 W / G 5	1,6 kg

Application
cabins
Approvals
according to the rules of relevant classification societies, additional IEC
Housing
zinc coated steel, powder coated white

Diffuser
polycarbonate opal
Lamps (not included)
tubular compact fluorescent lamp 5/7/9/11W, fluorescent lamp 8W
Electric
flexible wiring, heat resistant up to +105°C, switch 2-pole

Cable entry
1 inlet, cable ø max 11 mm
Mounting
2 mounting holes, ø 5.5 mm
Electrical connection
see finish section

4.17

[mm]

OPTIONS

220-230V 60Hz

120V 60Hz

240V 50Hz

Electronic Ballast 220-240V AC/DC

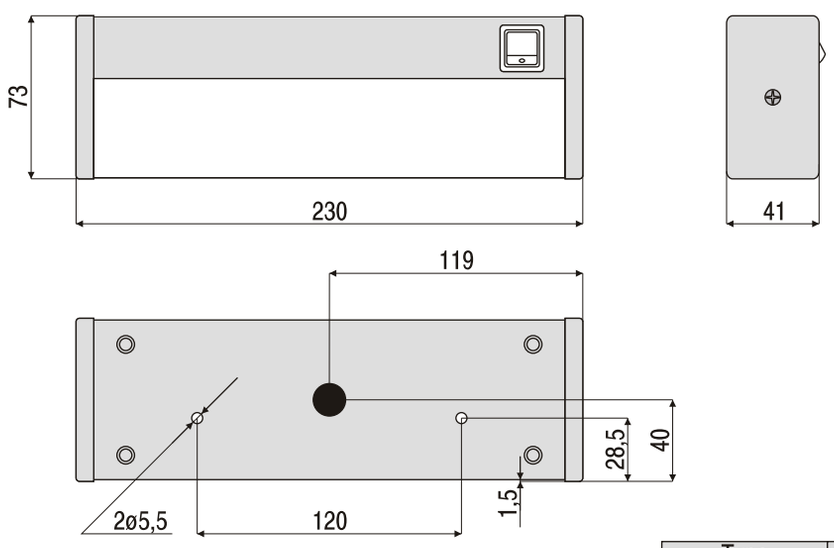

Type	L
KJP 41-109	230
KJP 41 108/111	330

PolamRem

POLAM-REM S.A. 80-531 Gdańsk ul.Sucha 25
tel. +48(0-58) 520-74-00 fax +48(0-58) 343-26-29
www.polam-rem.com.pl; polamrem@polam-rem.com.pl

Technical modification reserved without prior notice

Order Specification

Type

KJP 41 - x x x x

- 1 x 5/7/9 W - **109**
- 1 x 11 W - **111**
- 1 x 8 W - **108**

magnetic ballast:
- 230V/50Hz 0
- 220-230V/60Hz - **1**
- 120V/60Hz - **2**
- 240V/50Hz - **3**

electronic ballast:
- 220-240V AC/DC - **7**

Example of type description

KJP 41 - 1090 light fitting for one tubular fluorescent lamp 5/7/9W, supply voltage 230V/50Hz.

PolamRem

POLAM-REM S.A. 80-531 Gdańsk ul.Sucha 25
tel. +48(0-58) 520-74-00 fax +48(0-58) 343-26-29
www.polam-rem.com.pl; polamrem@polam-rem.com.pl

Technical modification reserved without prior notice

Diagrams Electrical Connection for Wall and Ceiling Luminaires, surface

POLAM-REM S.A.

connection with switch

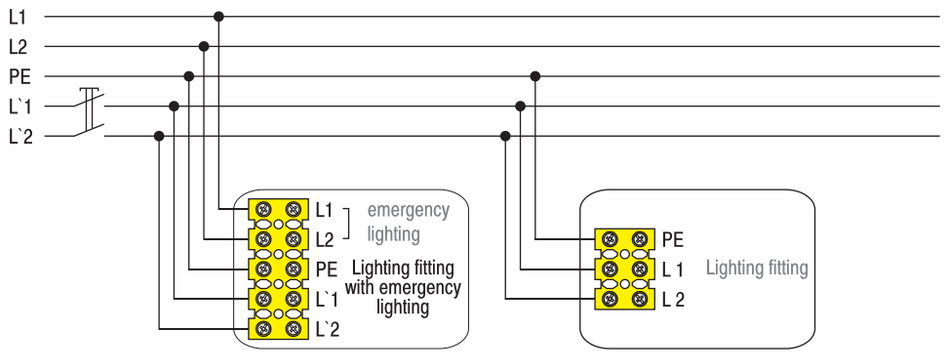

connection without switch

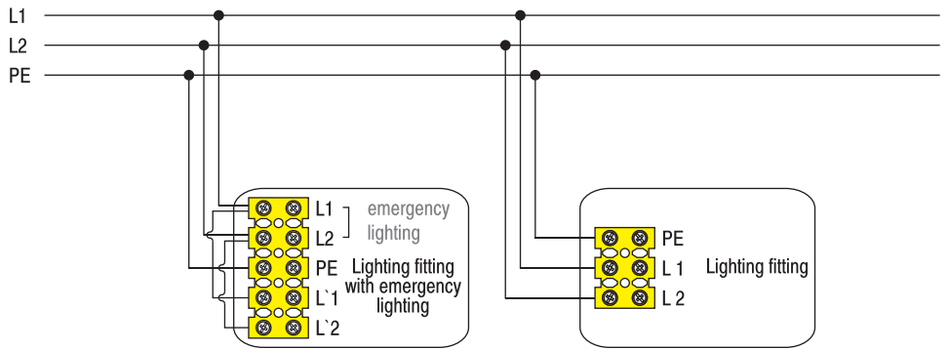

4.17

connection with emergency lampholder B15d

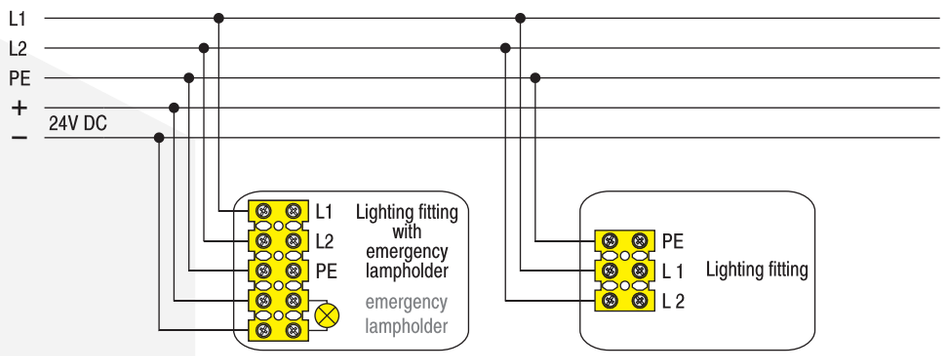

connection with dimmable

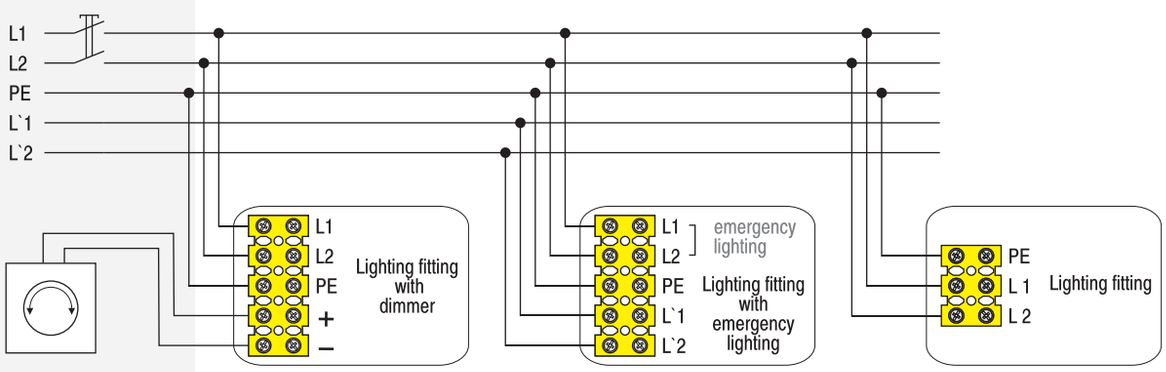

PolamRem

POLAM-REM S.A. 80-531 Gdańsk ul.Sucha 25
tel. +48(0-58) 520-74-00 fax +48(0-58) 343-26-29
www.polam-rem.com.pl; polamrem@polam-rem.com.pl

Technical modification reserved without prior notice

POLAM-REM S.A.

Emergency Lighting

HLP 02 5.01 - 5.02
HLP 15 5.03 - 5.04
HLP 20 5.05 - 5.07
Diagrams Electrical Connection 5.08

PolamRem

POLAM-REM S.A. 80-531 Gdańsk ul.Sucha 25
tel. +48(0-58) 520-74-00 fax +48(0-58) 343-26-29
www.polam-rem.com.pl; polamrem@polam-rem.com.pl

Technical modification reserved without prior notice

HLP 02

Sign Light, surface, 1x8W/2x8W

POLAM-REM S.A.

IP 65

230V
50Hz

G5

Type	Light source	Light source power / lamp base	Weight
HLP 02 - 1080	fluorescent lamp	1 x 8 W / G 5	2,3 kg
HLP 02 - 2080		2 x 8 W / G 5	3,1 kg

Application
emergency light, illuminated sign for passage ways, public areas, etc.
Approvals
according to the rules of relevant classification societies, additional IEC
Housing
PMMA, white

Sign
PMMA, list of standard pictograms are available, other pictograms on customers request
Lamps (not included)
fluorescent lamp 8W
Electric
flexible wiring, heat resistant up to +105°C

Cable entry
2 cable glands, cable ø max 12 mm
Mounting
4 mounting holes, ø 5 mm
Electrical connection
see finish section

5.01

OPTIONS

220V 60Hz	230V 60Hz	120V 60Hz
	240V 50Hz	24V DC
Electronic Ballast	220V-240V 50Hz-60Hz	220V-240V DC
Battery Backup System	220V-240V 50Hz-60Hz	1h or 3h

Pictograms on request

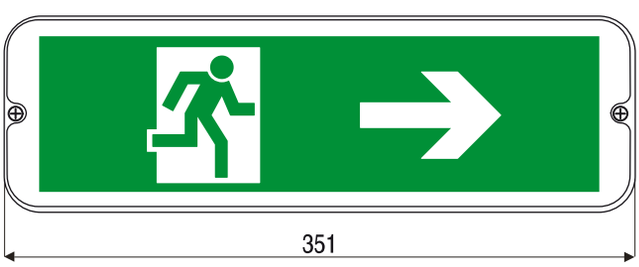

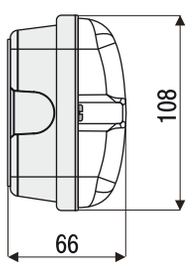

PolamRem

POLAM-REM S.A. 80-531 Gdańsk ul.Sucha 25
tel. +48(0-58) 520-74-00 fax +48(0-58) 343-26-29
www.polam-rem.com.pl; polamrem@polam-rem.com.pl

Technical modification reserved without prior notice

Order Specification

Type | Options

HLP 02 - x x x x / x x / x x x x

1 x 8 W - **108**
2 x 8 W - **208**

230V/50Hz - **0** /standard/
220V/60Hz - **1**
120V/60Hz - **2**
240V/50Hz - **3**
24V DC - **4**
230V/60Hz - **5**

Emergency lighting
- **A1 -** battery backup system 1h
- **A3 -** battery backup system 3h
- **A0 -** without battery backup system

Electronic ballast
- **E -** 220 - 240V / 50-60 Hz
- **E1 -** 220 - 240V DC

Example of type description

HLP 02 - 1080/N/A3 light fitting for one fluorescent lamp 8W with socket G5; supply voltage 230V/50Hz; battery backup system - 3h

PolamRem

POLAM-REM S.A. 80-531 Gdańsk ul.Sucha 25
tel. +48(0-58) 520-74-00 fax +48(0-58) 343-26-29
www.polam-rem.com.pl; polamrem@polam-rem.com.pl

Technical modification reserved without prior notice

HLP 15

Sign Light, surface, 1x11W/2x11W/1x30W

POLAM-REM S.A.

IP 40

230V 50Hz

G23

G13

Type	Light source	Light source power / lamp base	Weight
HLP 15-1110	tubular compact fluorescent lamp	1 x 11 W / G 23	2,3 kg
HLP 15-2110		2 x 11 W / G 23	3,1 kg
HLP 15-1300	fluorescent lamp	1 x 30 W / G 13	4,7 kg

Application
emergency light, illuminated sign for passage ways, public areas, etc.
Approvals
according to the rules of relevant classification societies, additional IEC
Housing
aluminium, powder coated white

Sign
PMMA, list of standard pictograms are available, other pictograms on customers request
Lamps (not included)
tubular compact fluorescent lamp 11W, fluorescent lamp 30W
Electric
flexible wiring, heat resistant up to +105°C

Cable entry
1 cable gland, cable ø max 12 mm
Mounting
4 mounting holes, ø 5 mm
Electrical connection
see finish section

5.03

[mm]

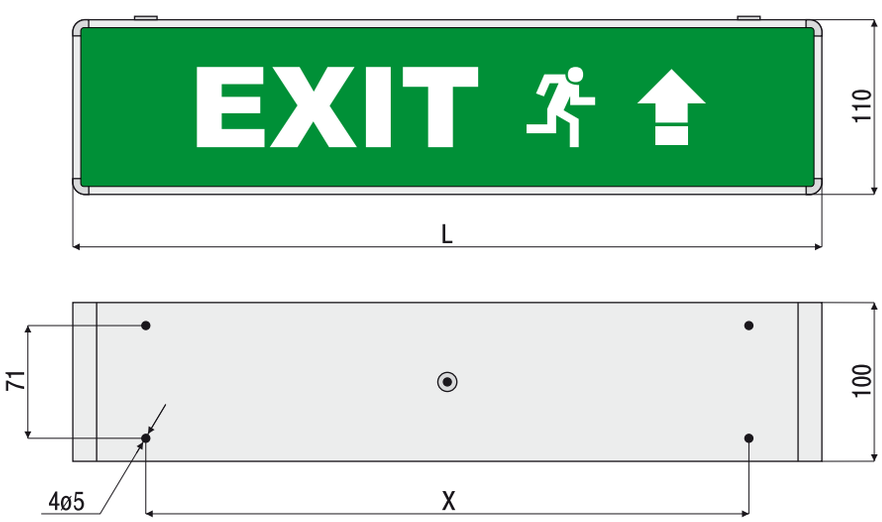

Type	L	X
HLP 15-1110	492	380
HLP 15-2110	700	380
HLP 15-1300	948	630

OPTIONS

220V 60Hz | 230V 60Hz | 120V 60Hz | 240V 50Hz | 24V DC

Electronic Ballast	220V-240V 50Hz-60Hz	220V-240V DC
Battery Backup System	220V-240V 50Hz-60Hz	1h or 3h

Pictograms on request

PolamRem
POLAM-REM S.A. 80-531 Gdańsk ul.Sucha 25
tel. +48(0-58) 520-74-00 fax +48(0-58) 343-26-29
www.polam-rem.com.pl; polamrem@polam-rem.com.pl

Technical modification reserved without prior notice

Order Specification

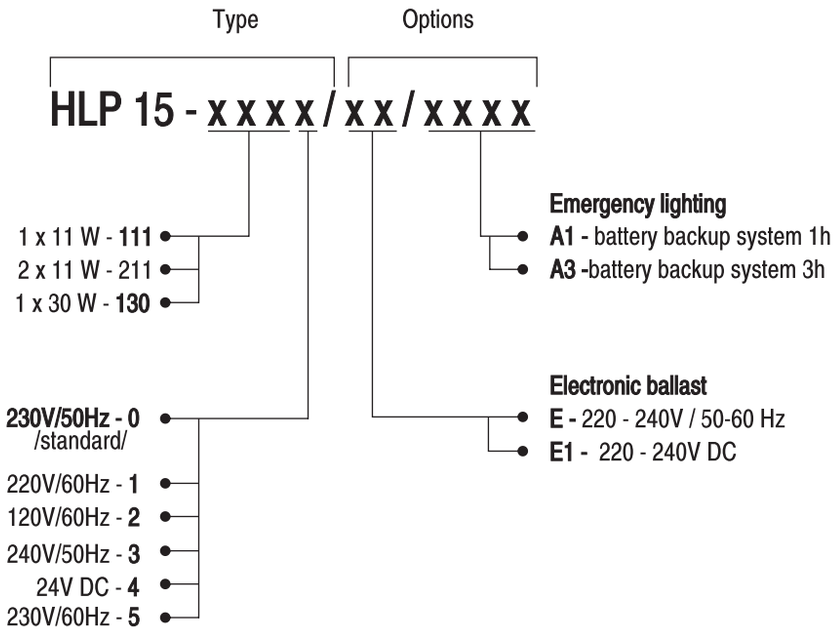

Example of type description

HLP 15-1110**/A3** light fitting for one tubular compact fluorescent lamp 11W with socket G23; supply voltage 230V/50Hz; battery backup system - 3h

PolamRem

POLAM-REM S.A. 80-531 Gdańsk ul.Sucha 25
tel. +48(0-58) 520-74-00 fax +48(0-58) 343-26-29
www.polam-rem.com.pl; polamrem@polam-rem.com.pl

Technical modification reserved without prior notice

HLP 20

Sign Light, Recessed, 1x8W/2x8W/1x21W

POLAM-REM S.A.

IP 20

230V 50Hz

G5

Type	Light source	Light source power / lamp base	Weight
HLP 20-1080	fluorescent lamp	1 x 8 W / G 5	2,5 kg
HLP 20-2080		2 x 8 W / G 5	3,2 kg
HLP 20-1210		1 x 21 W / G 5	4,4 kg

Application
emergency light, illuminated sign for passage ways, public areas, etc.

Approvals
according to the rules of relevant classification societies, additional IEC

Housing
zinc coated steel, powder coated white

Sign
PMMA, list of standard pictograms are available, other pictograms on customers request

Lamps (not included)
fluorescent lamp 8W/21W

Electric
flexible wiring, heat resistant up to +105°C

Cable entry
3-pole plug

Mounting
mounting holes, ø 4,5 mm

Electrical connection
see finish section

5.05

OPTIONS

220V 60Hz	230V 60Hz	120V 60Hz
	240V 50Hz	24V DC
Electronic Ballast	220V-240V 50Hz-60Hz	220V-240V DC
Battery Backup System	220V-240V 50Hz-60Hz	1h or 3h

Pictograms on request

HLP 20

[mm]

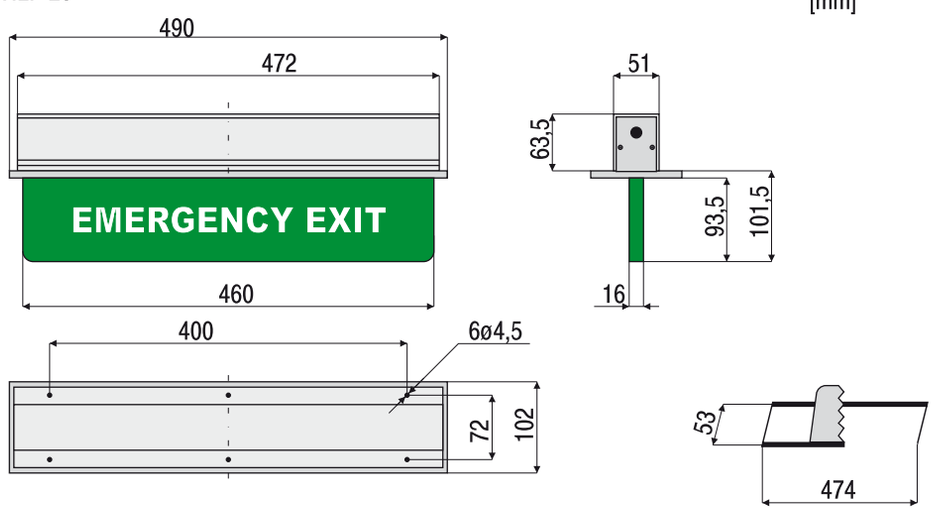

PolamRem
POLAM-REM S.A. 80-531 Gdańsk ul.Sucha 25
tel. +48(0-58) 520-74-00 fax +48(0-58) 343-26-29
www.polam-rem.com.pl; polamrem@polam-rem.com.pl

Technical modification reserved without prior notice

Order Specification

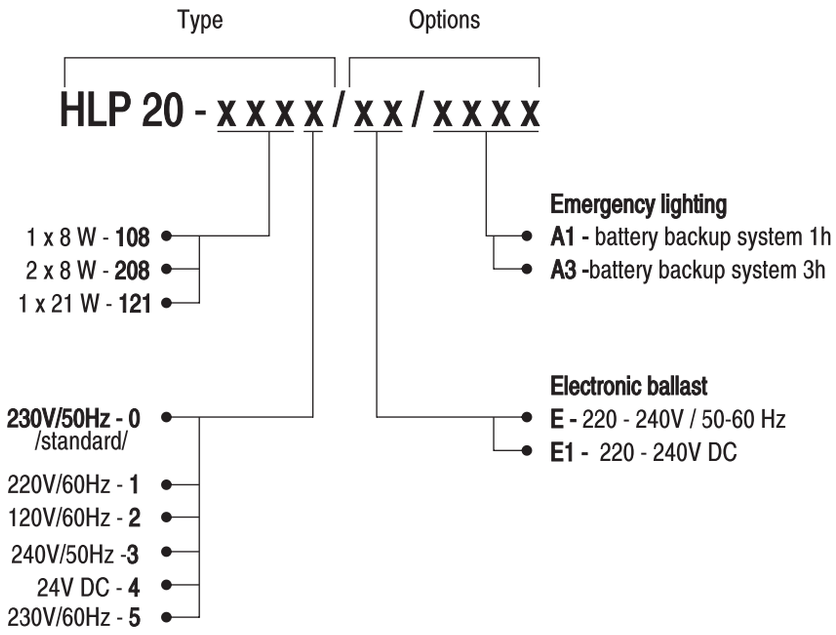

Example of type description

HLP 20-1080**/A3** light fitting for onefluorescent lamp 8W with socket G5; supply voltage 230V/50Hz; battery backup system - 3h

PolamRem

POLAM-REM S.A. 80-531 Gdańsk ul.Sucha 25
tel. +48(0-58) 520-74-00 fax +48(0-58) 343-26-29
www.polam-rem.com.pl; polamrem@polam-rem.com.pl

Technical modification reserved without prior notice

Sign Light, Recessed, 1x8W/2x8W/1x21W

POLAM-REM S.A.

HLP 20-1080/HLP 20-2080

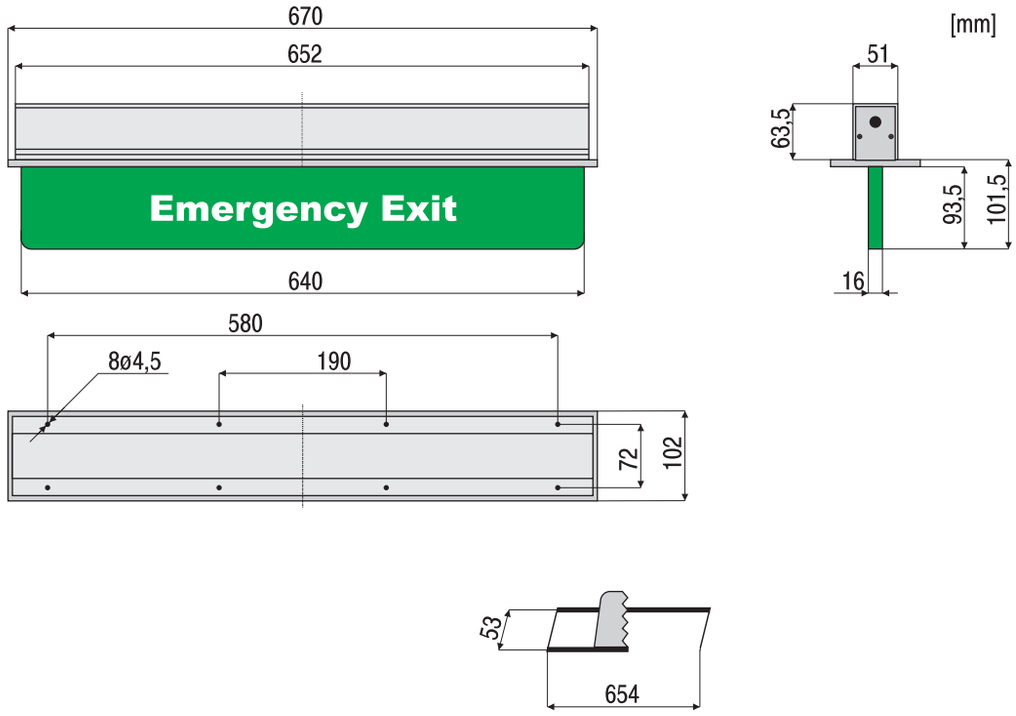

5.07

HLP 20-1210

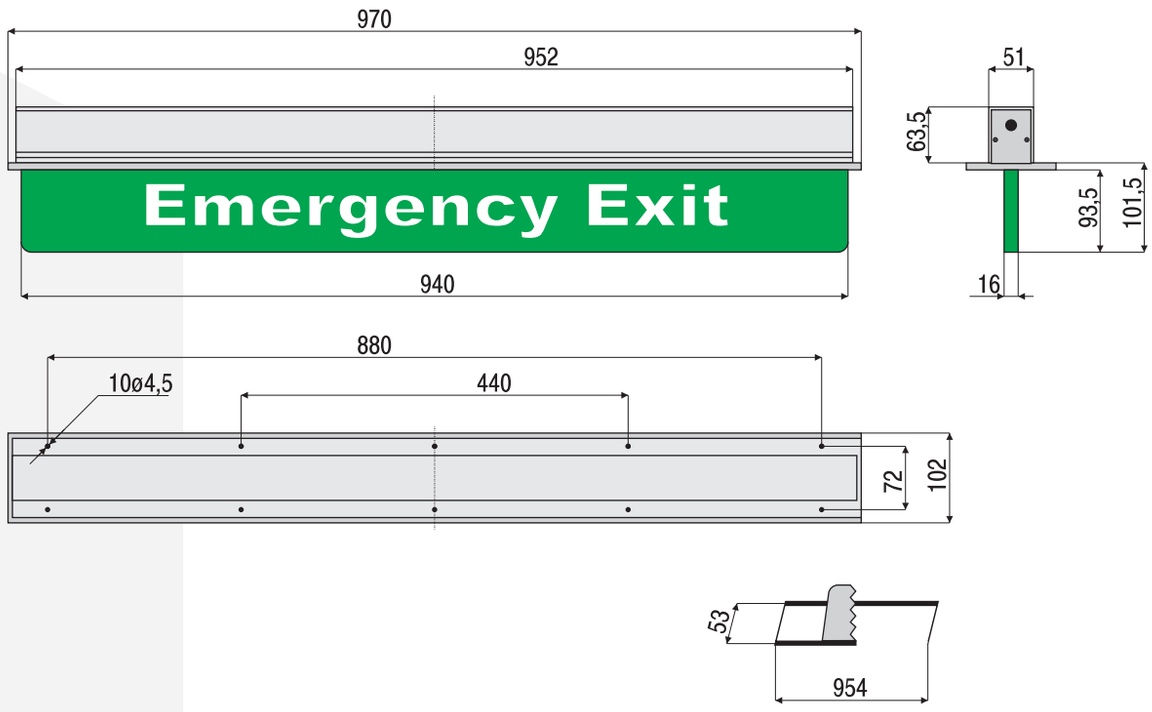

PolamRem
POLAM-REM S.A. 80-531 Gdańsk ul.Sucha 25
tel. +48(0-58) 520-74-00 fax +48(0-58) 343-26-29
www.polam-rem.com.pl; polamrem@polam-rem.com.pl

Technical modification reserved without prior notice

Diagrams Electrical Connection for Emergency Lighting

connection with switch

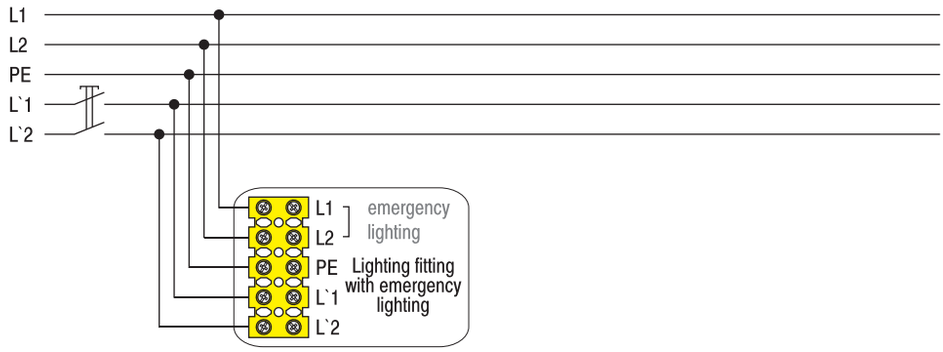

connection without switch

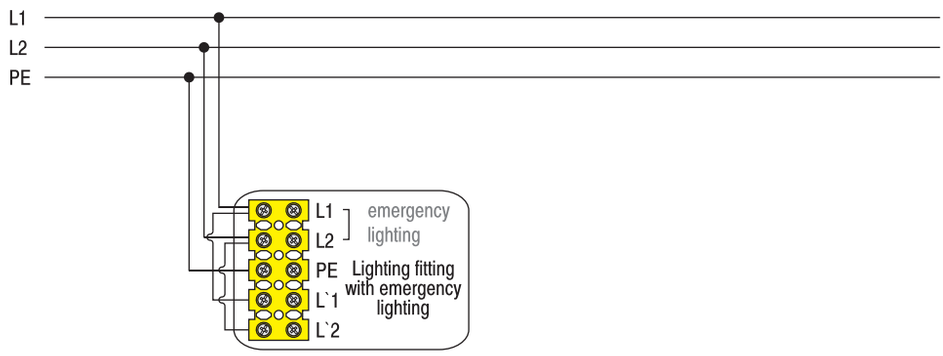

5.08

PolamRem
POLAM-REM S.A. 80-531 Gdańsk ul.Sucha 25
tel. +48(0-58) 520-74-00 fax +48(0-58) 343-26-29
www.polam-rem.com.pl; polamrem@polam-rem.com.pl

Technical modification reserved without prior notice

POLAM-REM S.A.

Downlights

DLP 38 6.01 - 6.02
DLP 39 6.03 - 6.04
Decor and light-control components for DLP 38; DLP 39 6.05
DLP 91 6.06 - 6.07
DLP 92 6.08 - 6.10
DLP 93 6.11 - 6.12
DLP 94 6.13 - 6.14

New LED luminaires

DLP 38 LED 6.15 - 6.16

Diagrams Electrical Connection

6.17 - 6.18

PolamRem

POLAM-REM S.A. 80-531 Gdańsk ul.Sucha 25
tel. +48(0-58) 520-74-00 fax +48(0-58) 343-26-29
www.polam-rem.com.pl; polamrem@polam-rem.com.pl

Technical modification reserved without prior notice

POLAM-REM S.A.

Downlight, 2x7W/1x13W/1x18W

DLP 38

IP 20

IP 44

230V 50Hz

B0 Execution

G23

G24d-1

G24d-2

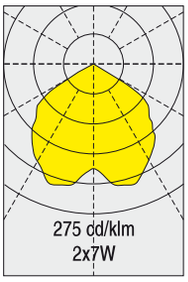

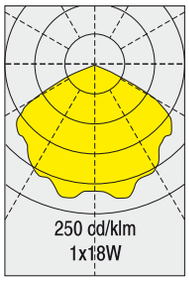

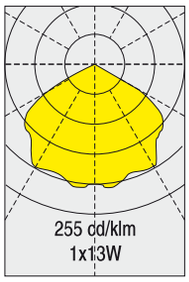

Type	Code	Light source	Light source power / lamp base	Weight
DLP 38 - 2070	338 - 207	tubular compact fluorescent lamp	2 x 7 W / G 23	1,3 kg
DLP 38 - 1130	338 -113		1 x 13 W / G24d1	1,3 kg
DLP 38 - 1180	338 - 118		1 x 18 W / G24d2	1,3 kg

Application
cabins, lounges, dining rooms, accomodation areas,
Approvals
according to the rules of relevant classification societies, additional IEC
Protection class
IP 20
IP 44 with screen
Housing
galvanized steel, powder coated white

Reflector
aluminium finished in gold, silver
Diffuser and cover ring
see next page
Lamps (not included)
tubular compact fluorescent lamp 7W/13W/18W
Electric
flexible wiring, heat resistant up to +105°C

Connections
plug and socket /Wieland GST/
Mounting
max 6 mounting holes, ø 4,5 mm
cut out: ø 144 mm
Electrical connection
see finish section

6.01

[mm]

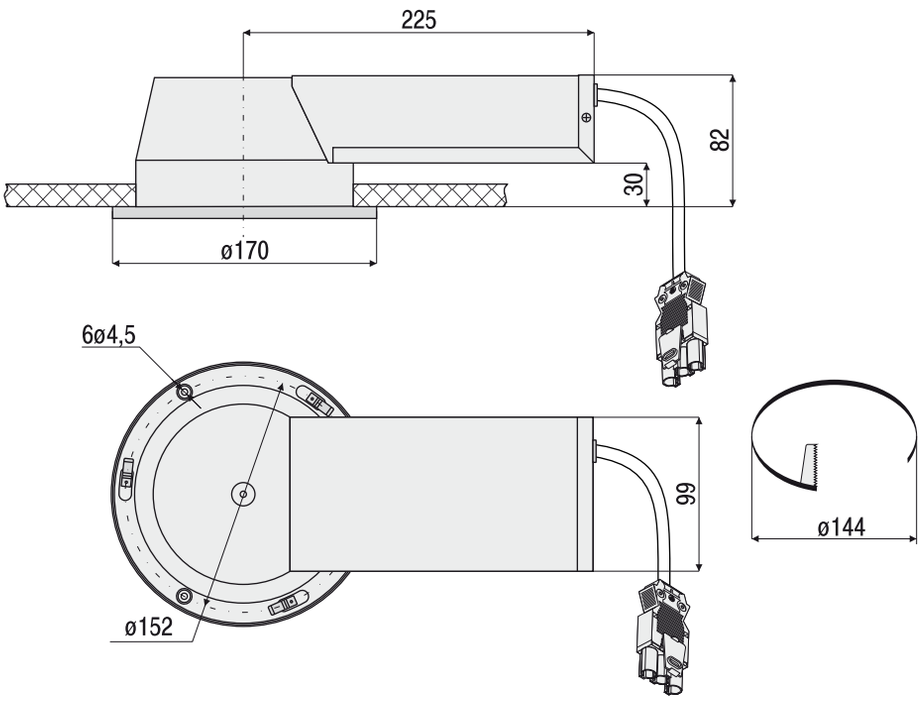

OPTIONS

220V 60Hz	230V 60Hz	120V 60Hz
240V 50Hz	24V DC	

Electronic Ballast	220V-240V 50Hz-60Hz	220V-240V DC
Dimmable Electronic Ballast	220V-240V 50Hz-60Hz	
Battery Backup System	220V-240V 50Hz-60Hz	1h or 3h

PolamRem

POLAM-REM S.A. 80-531 Gdańsk ul.Sucha 25
tel. +48(0-58) 520-74-00 fax +48(0-58) 343-26-29
www.polam-rem.com.pl; polamrem@polam-rem.com.pl

Technical modification reserved without prior notice

POLAM-REM S.A.

Order Specification

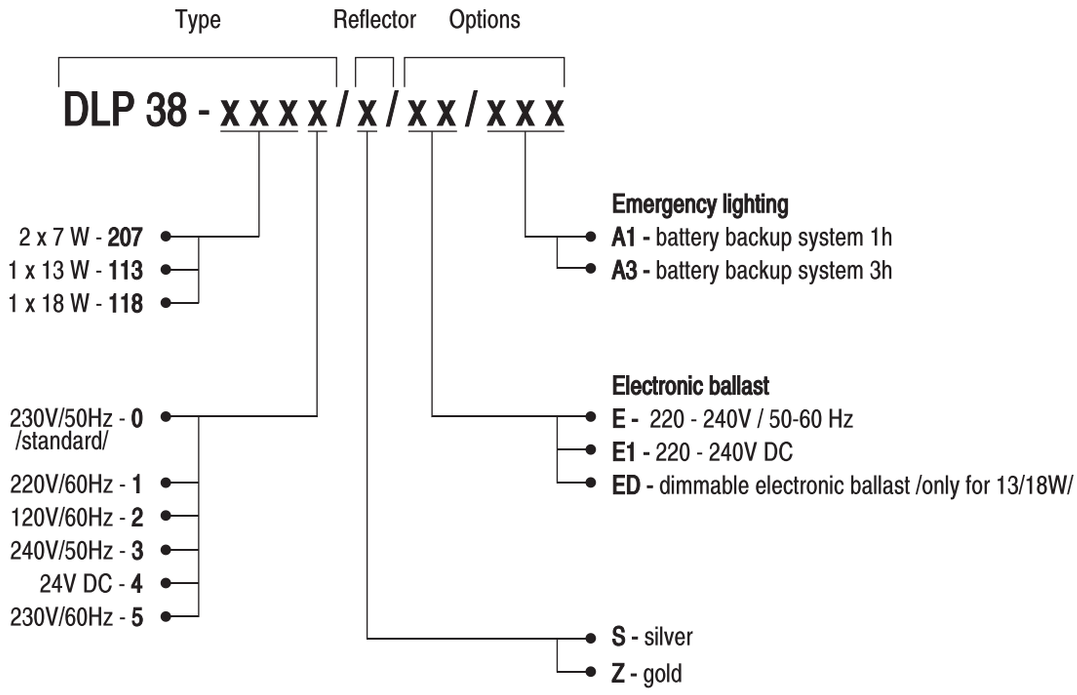

Decor and light-control components in separately ordered /see next page/

6.02

Example of type description

DLP 38 - 1133/Z light fitting for tubular compact fluorescent lamp 13W with socket G24d1; supply voltage 240V/50Hz; reflector - gold

PolamRem

POLAM-REM S.A. 80-531 Gdańsk ul.Sucha 25
tel. +48(0-58) 520-74-00 fax +48(0-58) 343-26-29
www.polam-rem.com.pl; polamrem@polam-rem.com.pl

Technical modification reserved without prior notice

POLAM-REM S.A.

Downlight, 1x12W

DLP 38 MLED

IP 44

220-240V AC/DC

L E D

Type	Wattage	Light Source	Weight	Light flux	Equivalent
DLP 38-MLED 170/112/7/...	1 x 12 W	LED	1,3 KG	1 x 1125 lm	1x18W (compact fl.)

Application
Cabins, lounges, dining rooms, accomodation rooms etc.

Approvals
According to the rules of relevant classification societies, additional IEC

Housing
Galvanized steel, powder coated white

Cover
Diffuser made of PC opal with wide range of decorative rings

Cable entry
3/5 pole plug and socket

Mounting
max 6 mounting holes, cut out: 144 mm

Electrical connection
See finish section

6.15

[mm]

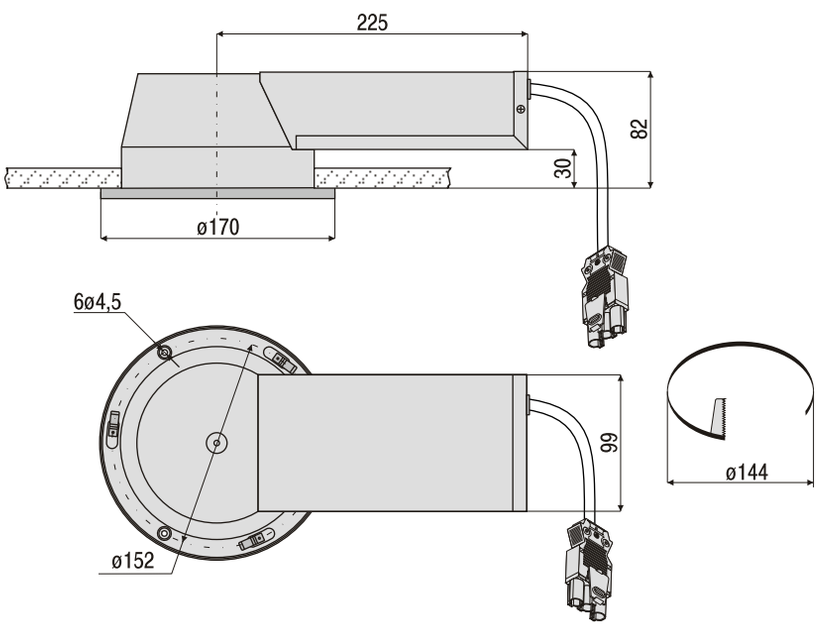

PolamRem

POLAM-REM S.A. 80-531 Gdańsk ul.Sucha 25
tel. +48(0-58) 520-74-00 fax +48(0-58) 343-26-29
www.polam-rem.com.pl; polamrem@polam-rem.com.pl

Technical modification reserved without prior notice

Order Specification

Supply voltage | Colour Temp. | Decorative Ring

DLP 38 MLED 170/112 / x / xxx / x

220-240V AC/ DC - **7**

3000K - **830**

4000K - **840**

- **DD - SROP** (silver ring, opal PC)
- **DD - GROP** (gold ring, opal PC)
- **DD - WROP** (white ring, opal PC)

Example of type description

DLP 38 MLED 117/112/7/830/DD - SROP light fitting with LED source 12W; supply voltage 220-240V AC/DC; colour temp 3000K; silver decor ring

PolamRem

POLAM-REM S.A. 80-531 Gdańsk ul.Sucha 25
tel. +48(0-58) 520-74-00 fax +48(0-58) 343-26-29
www.polam-rem.com.pl; polamrem@polam-rem.com.pl

Technical modification reserved without prior notice

POLAM-REM S.A.

Downlight, 2x7W/1x13W

DLP 39

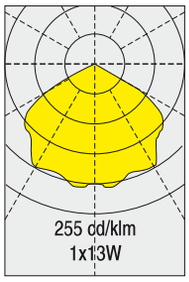

IP 20

IP 44

230V 50Hz

B0 Execution

G23

G24d-1

Type	Light source	Light source power / lamp base	Weight
DLP 39 - 2070	tubular compact fluorescent lamp	2 x 7 W / G 23	1,3 kg
DLP 39 - 1130		1 x 13 W / G24d1	1,4 kg

Application
cabins, lounges, dining rooms, accomodation areas,
Approvals
according to the rules of relevant classification societies, additional IEC
Protection class
IP 20
IP 44 with screen
Housing
galvanized steel, powder coated white

Reflector
aluminium finished in gold, silver
Diffuser and cover ring
see next page
Lamps (not included)
tubular compact fluorescent lamp 7W/13W
Electric
flexible wiring, heat resistant up to +105°C

Connections
plug and socket /Wieland GST/
Mounting
max 6 mounting holes, ø 4,5 mm
cut out: ø 144 mm
Electrical connection
see finish section

6.03

[mm]

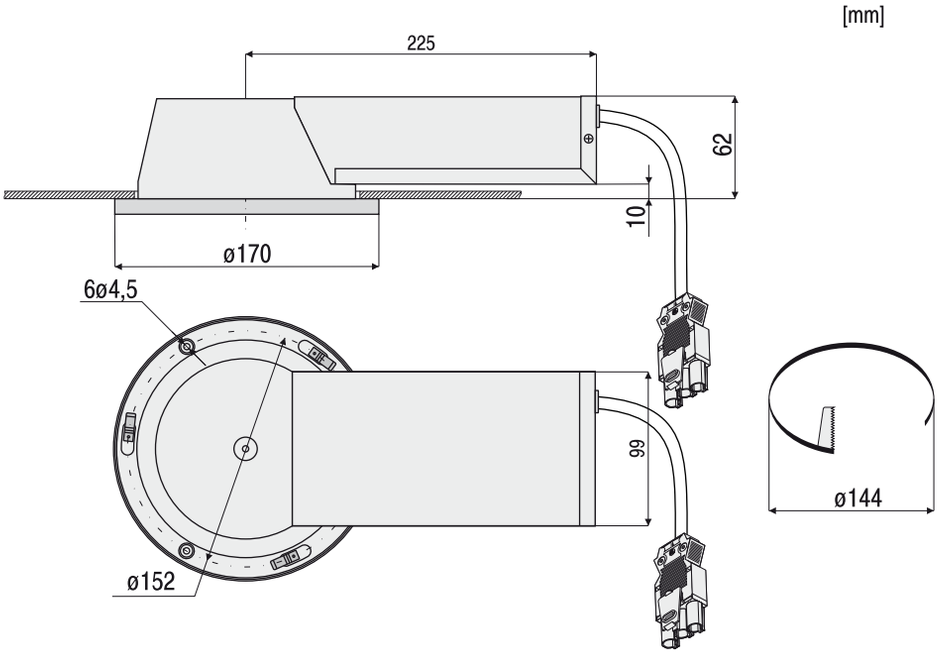

OPTIONS

220V 60Hz	230V 60Hz	120V 60Hz
240V 50Hz	24V DC	
Electronic Ballast	220V-240V 50Hz-60Hz	220V-240V DC
Dimmable Electronic Ballast	220V-240V 50Hz-60Hz	
Battery Backup System	220V-240V 50Hz-60Hz	1h or 3h

PolamRem

POLAM-REM S.A. 80-531 Gdańsk ul.Sucha 25
tel. +48(0-58) 520-74-00 fax +48(0-58) 343-26-29
www.polam-rem.com.pl; polamrem@polam-rem.com.pl

Technical modification reserved without prior notice

POLAM-REM S.A.

Order Specification

Type | Reflector | Options

DLP 39 - x x x x / x / x x / x x x

2 x 7 W - **207**
1 x 13 W - **113**

230V/50Hz - **0** /standard/
220V/60Hz - **1**
120V/60Hz - **2**
240V/50Hz - **3**
24V DC - **4**
230V/60Hz - **5**

Emergency lighting
A1 - battery backup system 1h
A3 - battery backup system 3h

Electronic ballast
E - 220 - 240V / 50-60 Hz
E1 - 220 - 240V DC
ED - dimmable electronic ballast /only for 13/18W/

S - silver
Z - gold

Decor and light-control components in separately ordered /see next page/

Example of type description
DLP 39 - 1133/Z light fitting for tubular compact fluorescent lamp 13W with socket G24d1; supply voltage 240V/50Hz; reflector - gold

PolamRem
POLAM-REM S.A. 80-531 Gdańsk ul.Sucha 25
tel. +48(0-58) 520-74-00 fax +48(0-58) 343-26-29
www.polam-rem.com.pl; polamrem@polam-rem.com.pl

Technical modification reserved without prior notice

Decor components

Trim ring

white	DR - W
silver	DR - S
gold	DR - G

Decor with glass ring

white ring, coloured glass	DR - WR /. . . . . /*
silver ring, coloured glass	DR - SR /. . . . . /*
gold ring, coloured glass	DR - GR /. . . . . /*

* coloured glass ring on request

Decor with glass diffuser

white ring, opal glass	DR - WROG
silver ring, opal glass	DR - SROG
gold ring, opal glass	DR - GROG

Light-control components

Diffusers IP 44

white ring, transparent PC	DD - WRTP
silver ring, transparent PC	DD - SRTP
gold ring, transparent PC	DD - GRTP
white ring, opal PC	DD - WROP
silver ring, opal PC	DD - SROP
gold ring, opal PC	DD - GROP

POLAM-REM S.A. 80-531 Gdańsk ul.Sucha 25
tel. +48(0-58) 520-74-00 fax +48(0-58) 343-26-29
www.polam-rem.com.pl; polamrem@polam-rem.com.pl

Technical modification reserved without prior notice

DLP 91

Halogen Downlight adjustable, max 50W

POLAM-REM S.A.

IP 20

12V

GU 5,3
GX 5,3

Type	Light source	Light source power / lamp base	Weight
DLP 91	cold beam reflector halogen lamp	20-50W/GX 5.3 (GU 5.3)	0,3 kg

Approvals
according to the rules of relevant classification societies, additional IEC
Housing
die - cast gold plated, chrome plated, white painted, other colours on request

Lamps (not included)
cold beam reflector halogen lamp 20 - 50W
Electric
12V, flexible wiring, heat resistant Up to + 250°C
Connections
plug and socket /Wieland GST/

Mounting
with 2 fixing clips
Electrical connection
see finish section
Remark
electronic transformer ET - . . . . has to be ordered separately

6.06

OPTIONS

Electronic Transformer	220V-240V 50Hz-60Hz

Thermo - protected Housing

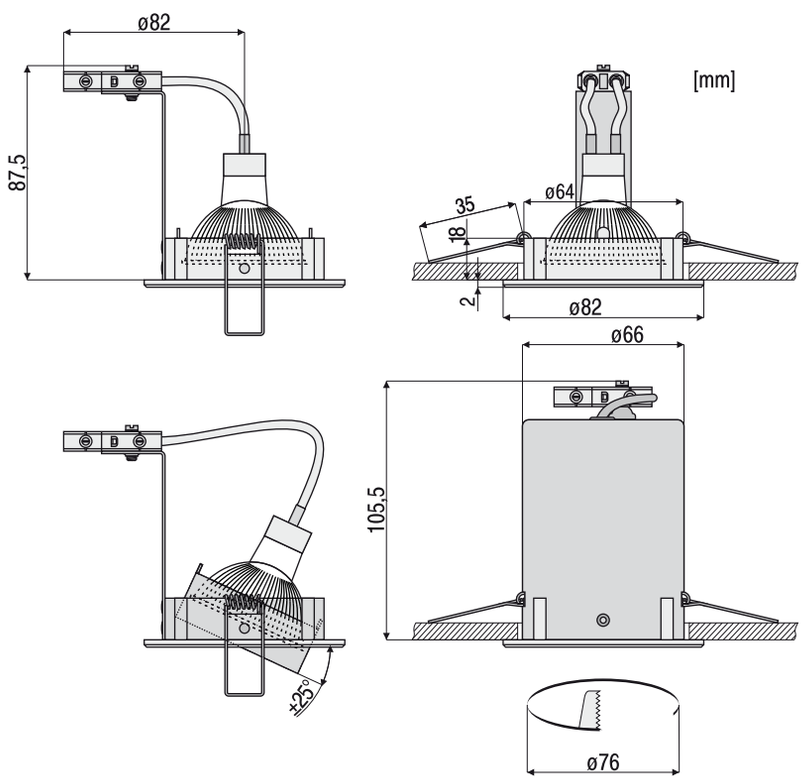

PolamRem
POLAM-REM S.A. 80-531 Gdańsk ul.Sucha 25
tel. +48(0-58) 520-74-00 fax +48(0-58) 343-26-29
www.polam-rem.com.pl; polamrem@polam-rem.com.pl

Technical modification reserved without prior notice

Order Specification

Type Colour Options

DLP 91 - x x / x x

silver - **S**
white - **B**
gold - **Z**

TP - thermo-protected housing

Example of type description

DLP 91 - Z light fitting for cold beam reflector halogen lamp max 50W with socket GX5.3; colour - gold

PolamRem

POLAM-REM S.A. 80-531 Gdańsk ul.Sucha 25
tel. +48(0-58) 520-74-00 fax +48(0-58) 343-26-29
www.polam-rem.com.pl; polamrem@polam-rem.com.pl

Technical modification reserved without prior notice

DLP 92

Halogen Downlight adjustable, max 50W

POLAM-REM S.A.

IP 20

12V

GU 5,3
GX 5,3

Type	Light source	Light source power / lamp base	Weight
DLP 92	cold beam reflector halogen lamp	20-50W/GX 5.3 (GU 5.3)	0,17 kg

Approvals
according to the rules of relevant classification societies, additional IEC

Housing
die - cast gold plated, chrome plated, white painted, other colours on request

Lamps (not included)
cold beam reflector halogen lamp 20 - 50W

Electric
12V, flexible wiring, heat resistant up to + 250°C

Connections
plug and socket /Wieland GST/

Mounting
with 2 fixing clips

Electrical connection
see finish section

Remark
electronic transformer ET - . . . . has to be ordered separately

6.08

[mm]

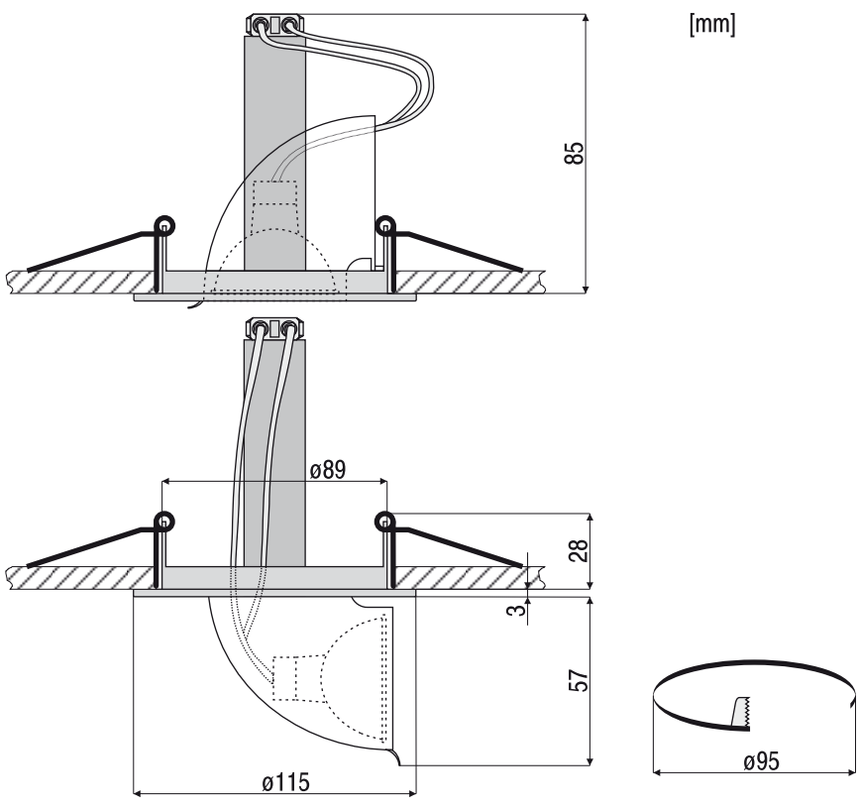

OPTIONS

Electronic Transformer	220V-240V 50Hz-60Hz

PolamRem

POLAM-REM S.A. 80-531 Gdańsk ul.Sucha 25
tel. +48(0-58) 520-74-00 fax +48(0-58) 343-26-29
www.polam-rem.com.pl; polamrem@polam-rem.com.pl

Technical modification reserved without prior notice

Order Specification

Type Base Colour

DLP 92 - x x / x x

round - **X1**
square - **X3**

silver - **S**
white - **B**
gold - **Z**

Example of type description

DLP 92 - X1/B light fitting for cold beam reflector halogen lamp max 50W with socket GX5.3; base fitting - round; colour - white

PolamRem

POLAM-REM S.A. 80-531 Gdańsk ul.Sucha 25
tel. +48(0-58) 520-74-00 fax +48(0-58) 343-26-29
www.polam-rem.com.pl; polamrem@polam-rem.com.pl

Technical modification reserved without prior notice

Halogen Downlight adjustable, max 50W

POLAM-REM S.A.

round - **X1**

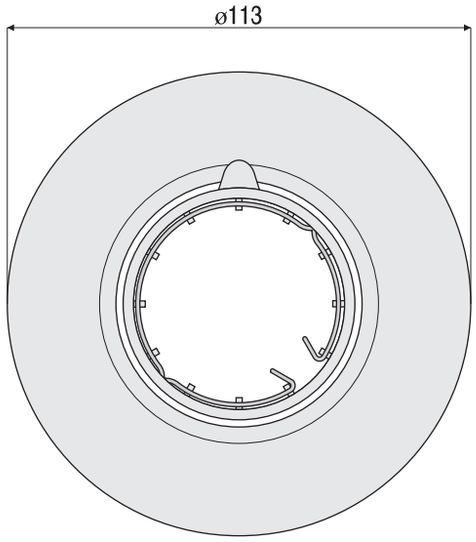

square - **X3**

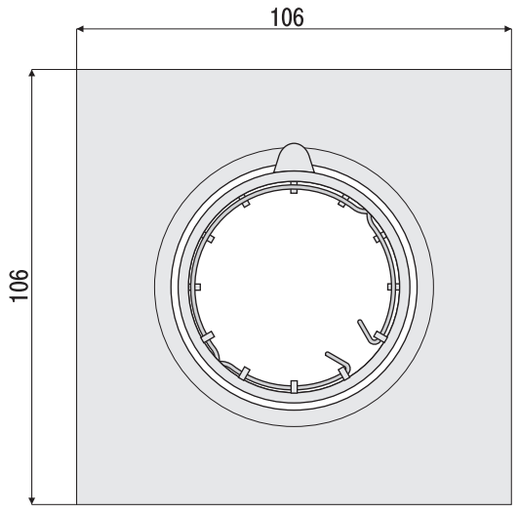

PolamRem
POLAM-REM S.A. 80-531 Gdańsk ul.Sucha 25
tel. +48(0-58) 520-74-00 fax +48(0-58) 343-26-29
www.polam-rem.com.pl; polamrem@polam-rem.com.pl

Technical modification reserved without prior notice

POLAM-REM S.A.

Halogen Downlight adjustable, max 50W

DLP 93

IP 20

12V

GU 5,3
GX 5,3

Type	Light source	Light source power / lamp base	Weight
DLP 93	cold beam relector halogen lamp	20-50W/GX 5.3 (GU 5.3)	0,17 kg

Approvals
according to the rules of relevant classification societies, additional IEC

Housing
die - cast gold plated, chrome plated, white painted, other colours on request

Lamps (not included)
cold beam reflector halogen lamp 20 - 50W

Electric
12V, flexible wiring, heat resistant up to + 250°C

Connections
plug and socket /Wieland GST/

Mounting
with 2 fixing clips

Electrical connection
see finish section

Remark
electronic transformer ET - . . . . has to be ordered separately

6.11

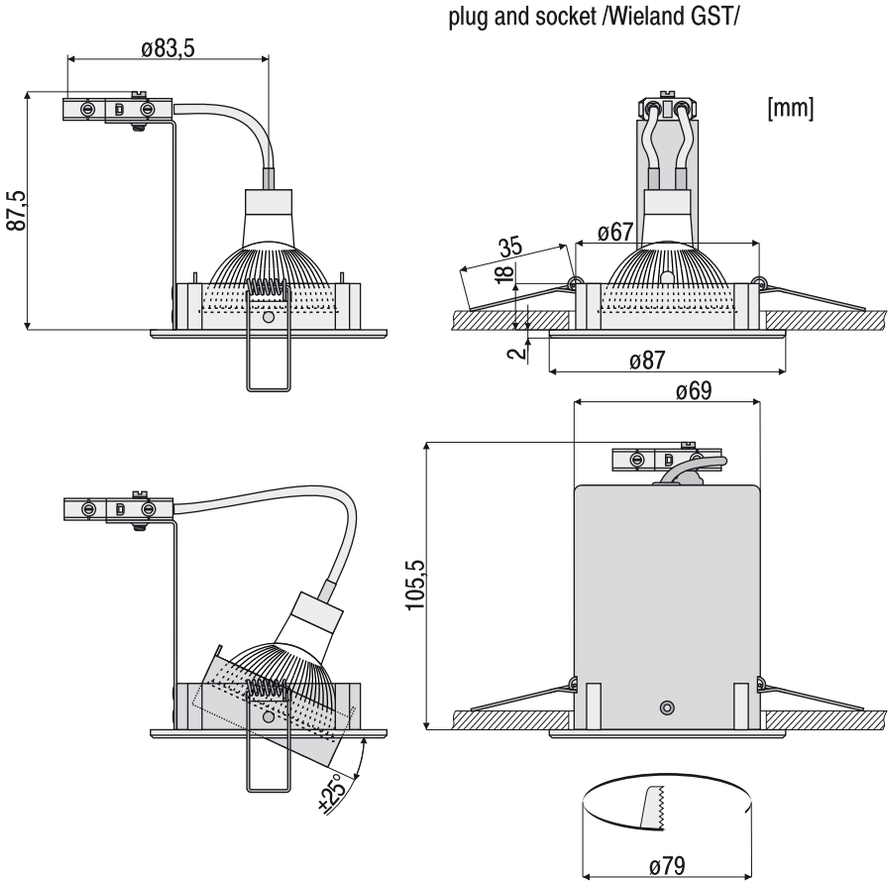

OPTIONS

Electronic Transformer 220V-240V 50Hz-60Hz

Thermo - protected Housing

PolamRem

POLAM-REM S.A. 80-531 Gdańsk ul.Sucha 25
tel. +48(0-58) 520-74-00 fax +48(0-58) 343-26-29
www.polam-rem.com.pl; polamrem@polam-rem.com.pl

Technical modification reserved without prior notice

POLAM-REM S.A.

Order Specification

Type Colour Options

DLP 93 - x x / x x

silver - **S**
white - **B**
gold - **Z**

TP - thermo-protected housing

Example of type description

DLP 93 - Z light fitting for cold beam reflector halogen lamp max 50W with socket GX5.3; colour - golr

PolamRem

POLAM-REM S.A. 80-531 Gdańsk ul.Sucha 25
tel. +48(0-58) 520-74-00 fax +48(0-58) 343-26-29
www.polam-rem.com.pl; polamrem@polam-rem.com.pl

Technical modification reserved without prior notice

POLAM-REM S.A.

Halogen Downlight, max 50W

DLP 94

IP 20

12V

GU 5,3
GX 5,3

Type	Light source	Light source power / lamp base	Weight
DLP 94	cold beam reflector halogen lamp	20-50W/GX 5.3 (GU 5.3)	0,15 kg

Approvals
according to the rules of relevant classification societies, additional IEC

Housing
die - cast gold plated, chrome plated, white painted, other colours on request

Lamps (not included)
cold beam reflector halogen lamp 20 - 50W

Electric
12V, flexible wiring, heat resistant up to + 250°C

Connections
plug and socket /Wieland GST/

Mounting
with 2 fixing clips

Electrical connection
see finish section

Remark
electronic transformer ET - . . . . has to be ordered separately

6.13

[mm]

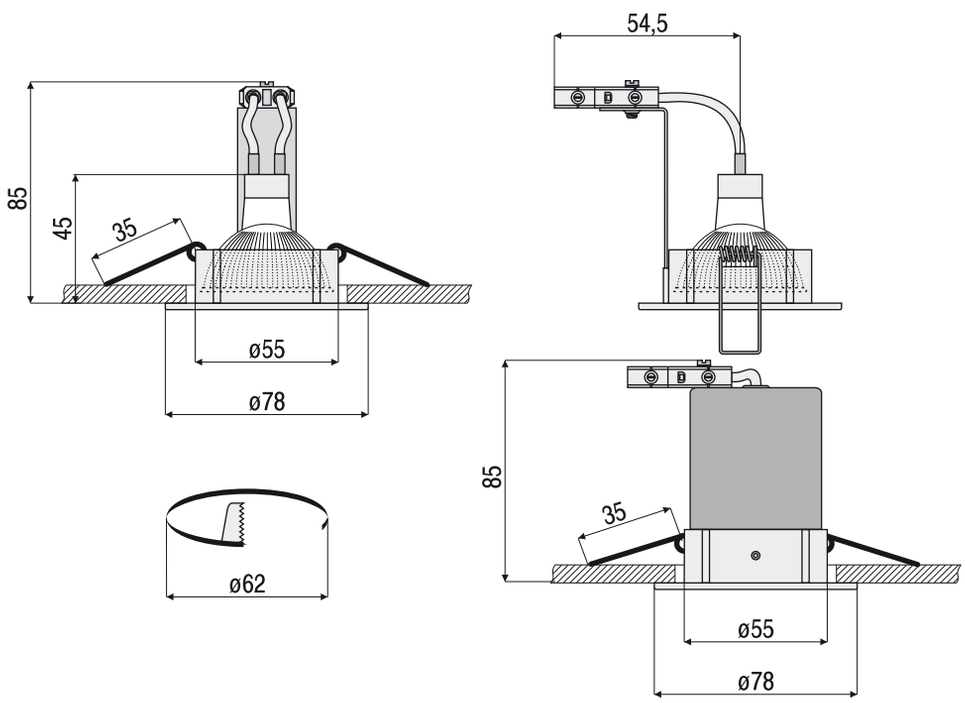

OPTIONS

Electronic Transformer 220V-240V 50Hz-60Hz

Thermo - protected Housing

PolamRem

POLAM-REM S.A. 80-531 Gdańsk ul.Sucha 25
tel. +48(0-58) 520-74-00 fax +48(0-58) 343-26-29
www.polam-rem.com.pl; polamrem@polam-rem.com.pl

Technical modification reserved without prior notice

POLAM-REM S.A.

Order Specification

Type Colour Options

DLP 94 - x x / x x / x x

silver - **S**
white - **B**
gold - **Z**

ST - 230V

TP - thermo-protected housing

Example of type description

DLP 94 - Z light fitting for cold beam reflector halogen lamp max 50W with socket GX5.3; colour - gold

PolamRem

POLAM-REM S.A. 80-531 Gdańsk ul.Sucha 25
tel. +48(0-58) 520-74-00 fax +48(0-58) 343-26-29
www.polam-rem.com.pl; polamrem@polam-rem.com.pl

Technical modification reserved without prior notice

POLAM-REM S.A.

Office and Workplace Luminaires

TIP 14	7.01
TIP 20	7.02
TIP 15	7.03
TIP 16	7.04
TIP 20-1220	7.05

PolamRem

POLAM-REM S.A. 80-531 Gdańsk ul.Sucha 25
tel. +48(0-58) 520-74-00 fax +48(0-58) 343-26-29
www.polam-rem.com.pl; polamrem@polam-rem.com.pl

Technical modification reserved without prior notice

POLAM-REM S.A.

Chartable Light, 1x20W

TIP 14

IP 20

230V
50Hz

G4

Type	Light source	Light source power / lamp base	Lenght	Pedestal	Weight
TIP 14 - 1600	halogen lamp	1x20W / G4	arm flexible, 250 mm	incorporated transformer, 230V / 12V	1,3 kg
TIP 14 - 1601			arm flexible, 500 mm	incorporated transformer, 230V / 12V	1,5 kg
TIP 14 - 1700			arm flexible, 250 mm	dimmer incorporated, transformer separate	1,0 kg
TIP 14 - 1701			arm flexible, 500 mm	dimmer incorporated, transformer separate	1,2 kg

Approvals
according to the rules of relevant classification societies, additional IEC
Finish
with flexible arm, switch in lamp head

Colour
black
Lamps (not included)
halogen lamp 20W

Electric
230V/ 12V, (24V on request)
Mounting
4 mounting holes ø 5 mm

7.01

[mm]

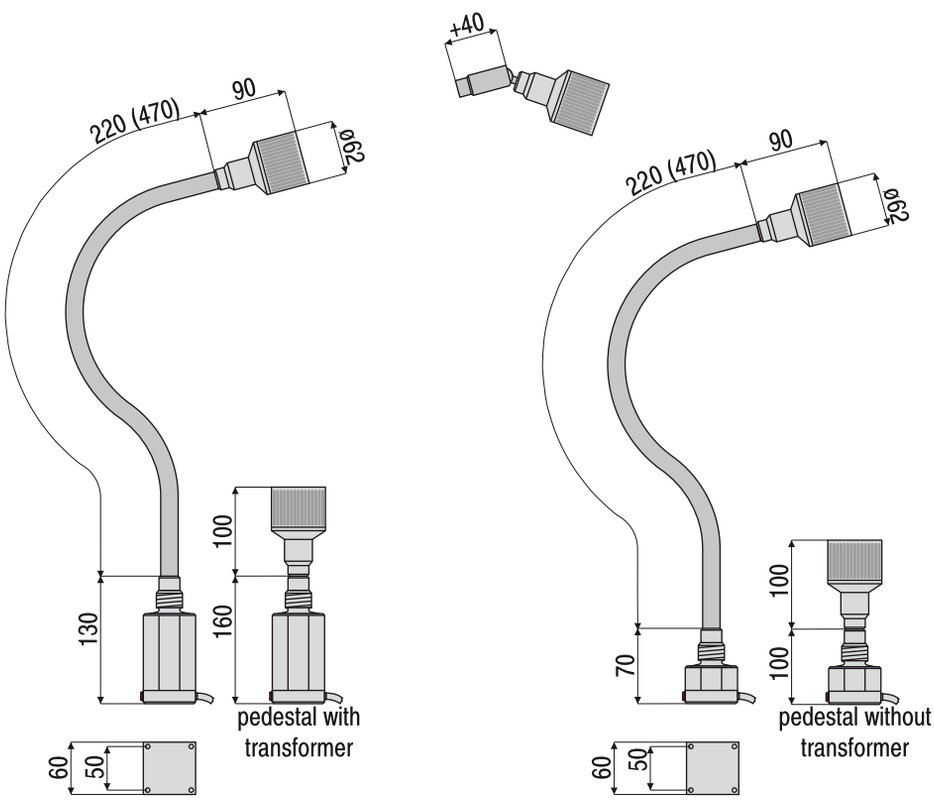

OPTIONS

24V

PolamRem

POLAM-REM S.A. 80-531 Gdańsk ul.Sucha 25
tel. +48(0-58) 520-74-00 fax +48(0-58) 343-26-29
www.polam-rem.com.pl; polamrem@polam-rem.com.pl

Technical modification reserved without prior notice

TIP 20 - 1000 Table Light, max 100W

POLAM-REM S.A.

IP 20

E27

Type	Light source	Light source power / lamp base	Weight
TIP 20 - 1000	incandescent lamp	max 100W/ E27	1,5 kg
TIP 20 - 1001	incandescent lamp	max 100W/ E27	1,5 kg

Approvals
according to the rules of relevant classification societies, additional IEC
Finish
metal construction

Colour
grey and silver
Lamps (not included)
incandescent lamp max 100W

Electric
230V, 1.5 m.. free cable with schukoplug, safety class 1
switch in lamp head

7.02

[mm]

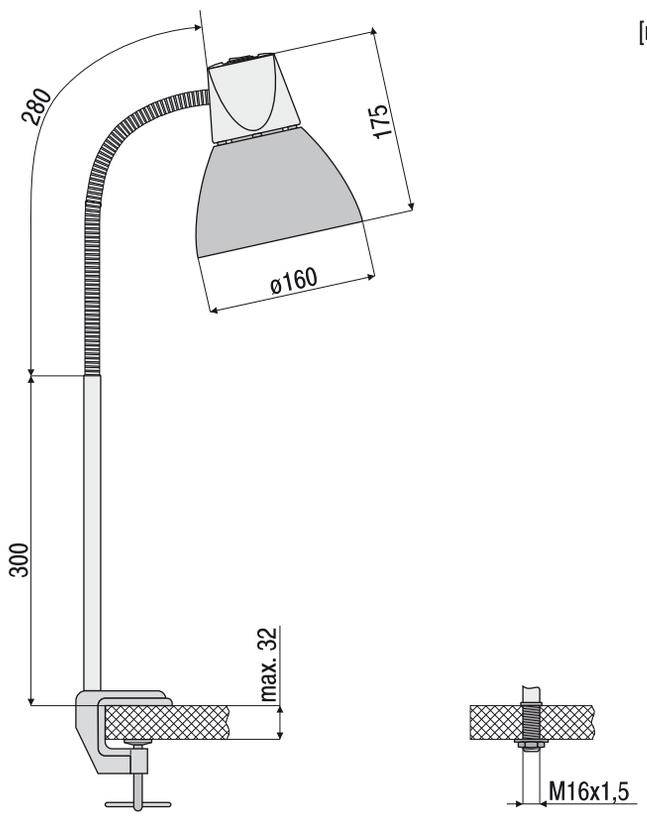

TIP 20-1001 TIP 20-1000

OPTIONS

Wall Bracket

PolamRem
POLAM-REM S.A. 80-531 Gdańsk ul.Sucha 25
tel. +48(0-58) 520-74-00 fax +48(0-58) 343-26-29
www.polam-rem.com.pl; polamrem@polam-rem.com.pl

Technical modification reserved without prior notice

POLAM-REM S.A.

Table light, max 35W

TIP 15

IP 20

230V 50Hz

G4

Type	Light source	Light source power / lamp base	Lenght	Pedestal	Weight
TIP 15	halogen lamp	1x20W / G4 1x35W / GY6/35	arm flexible, 500 mm	transformer, 230V / 12V	1 kg

Approvals
according to the rules of relevant classification societies, additional IEC
Finish
with flexible arm, switch in lamp head

Colour
black
Lamps
halogen lamp 20W or 35W
Electric
230V/ 12V

Mounting
4 mounting holes ø 4 mm
Options
lamp support (Index 31-999-0079)

7.03

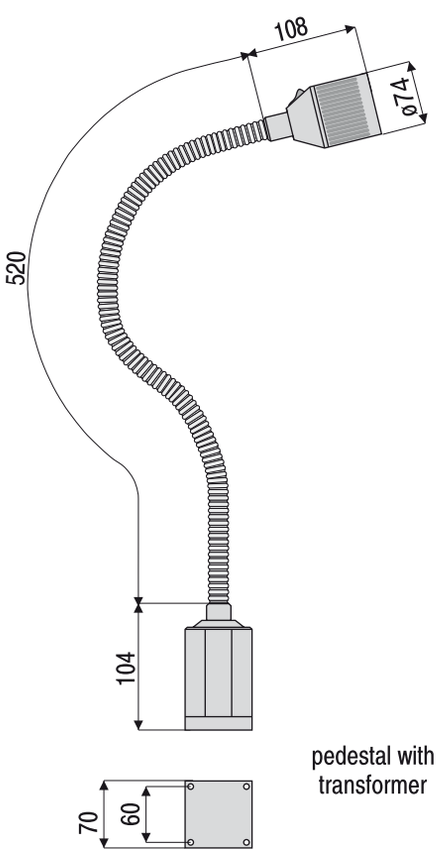

pedestal with transformer

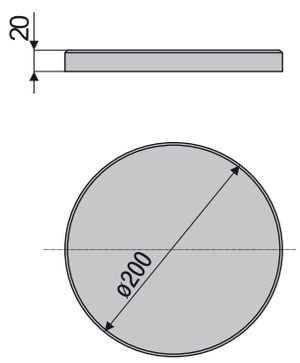

Option- lamp support

OPTIONS

24V

Lamp support

PolamRem

POLAM-REM S.A. 80-531 Gdańsk ul.Sucha 25
tel. +48(0-58) 520-74-00 fax +48(0-58) 343-26-29
www.polam-rem.com.pl; polamrem@polam-rem.com.pl

Technical modification reserved without prior notice

TIP 16 - 1110 Table Light, 1x11W

POLAM-REM S.A.

IP 20

230V
50Hz

G23

Type	Light source	Light source power / lamp base	Weight
TIP 16 - 1110	tubular compact fluorescent lamp	1x11W / G23	1,2 kg

Approvals
according to the rules of relevant classification societies, additional IEC
Finish
with flexible arm, switch in lamp head

Colour
Black
Lamps (not included)
tubular compact fluorescent lamp 11W

Electric
230V, 50Hz 0r 60Hz, 2 m free cable with europlug, switch in lamp head
Mounting
4 mounting holes ø 4 mm

7.04

OPTIONS

Lamp support

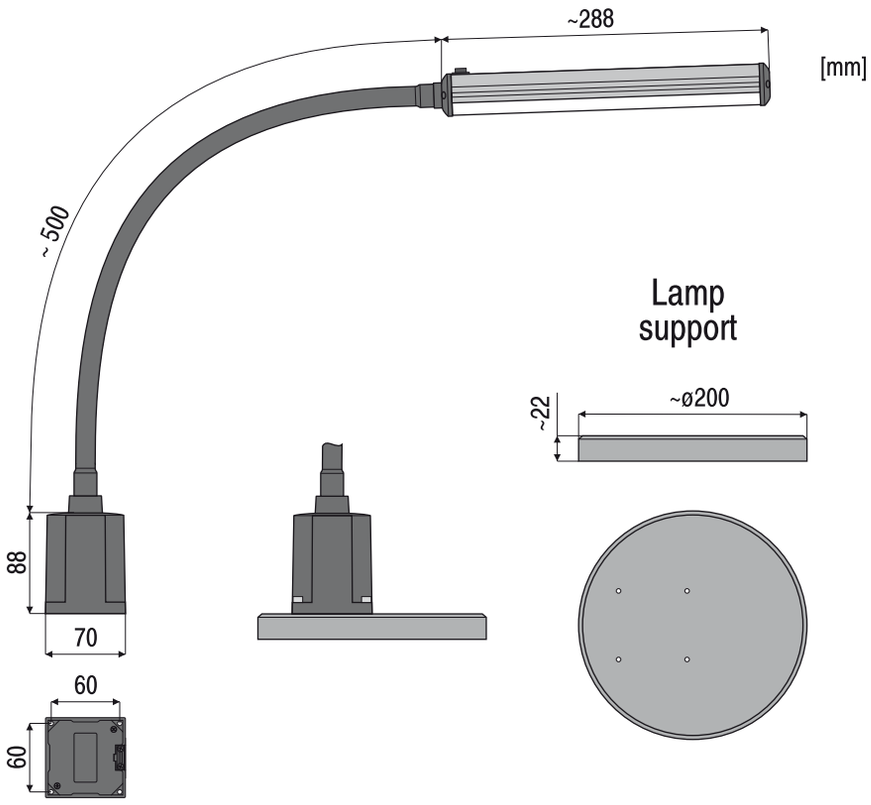

PolamRem
POLAM-REM S.A. 80-531 Gdańsk ul.Sucha 25
tel. +48(0-58) 520-74-00 fax +48(0-58) 343-26-29
www.polam-rem.com.pl; polamrem@polam-rem.com.pl

Technical modification reserved without prior notice

POLAM-REM S.A.

Magnifier Table Light, 1X22W

TIP 20 - 1220

IP 20

230V
50Hz

G11q

Type	Light source	Light source power / lamp base	Weight
TIP 20 - 1220/K	fluorescent circline lamp	1x22W / G11q	3 kg
TIP 20 - 1220	fluorescent circline lamp	1x22W / G11q	3,1 kg

Approvals
according to the rules of relevant classification societies, additional IEC

Finish
metal construction

Lens
biconvex glass lens ø 120 mm, 3-diopters (= 1,75x power)

Lamps (not included)
fluorescent circline lamp 22W

Electric
1.5 m. free cable with switch in lamp head

Mounting
with screw down base

[mm]

7.05

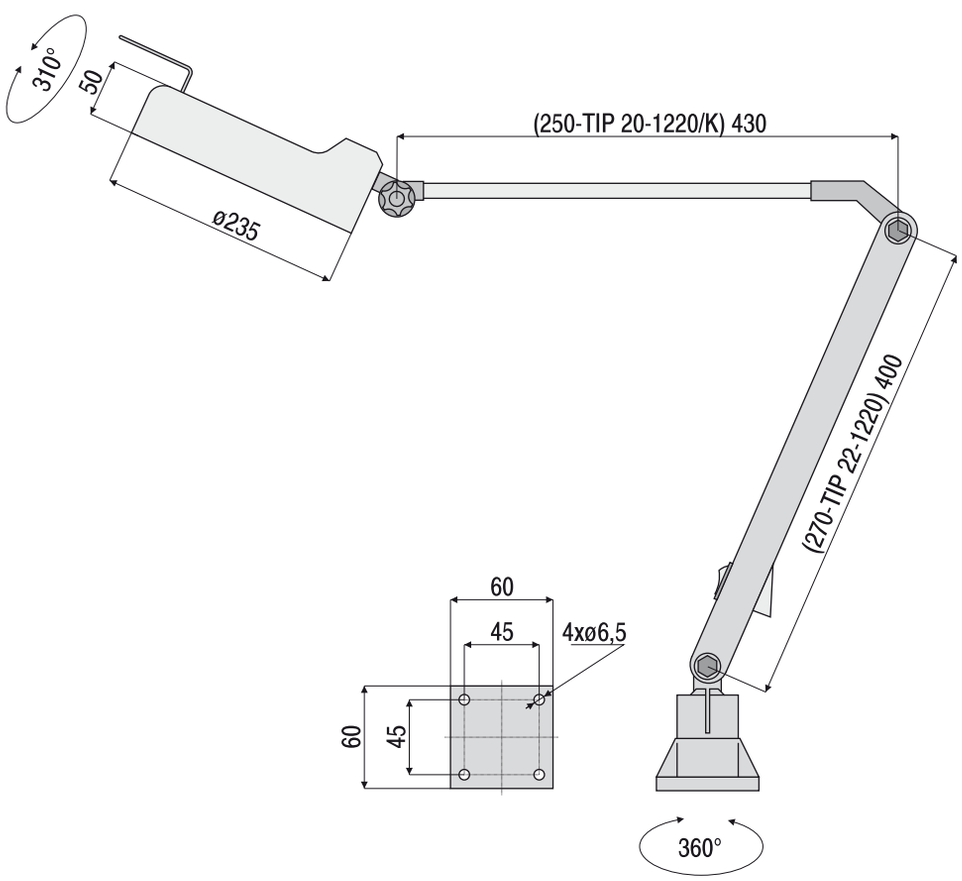

OPTIONS

Lamp support

Dimmable version on request

PolamRem

POLAM-REM S.A. 80-531 Gdańsk ul.Sucha 25
tel. +48(0-58) 520-74-00 fax +48(0-58) 343-26-29
www.polam-rem.com.pl; polamrem@polam-rem.com.pl

Technical modification reserved without prior notice

POLAM-REM S.A.

Decorative Table and Wall Lights

Jupiter 1	8.01
Jupiter 2	8.01
Jupiter 3	8.02
Jupiter 4	8.02
Jupiter 5	8.03
Jupiter 7	8.04
WLP 60	8.05 - 8.06
Diagrams Electrical Connection	8.07

PolamRem

POLAM-REM S.A. 80-531 Gdańsk ul.Sucha 25
tel. +48(0-58) 520-74-00 fax +48(0-58) 343-26-29
www.polam-rem.com.pl; polamrem@polam-rem.com.pl

Technical modification reserved without prior notice

POLAM-REM S.A.

Wall Light, max 60W

Jupiter

IP 20

Type	Code	Light source	Light source power / lamp base	Weight
Jupiter 1	208a CLK	incadescent lamp	max 60W / E 27	1,0 kg
Jupiter 2	208 CLK	incadescent lamp	max 60W / E27	1,1 kg

Approvals
according to the rules of relevant classification societies, additional IEC

Housing
brass polished

Shade
perlatex beige, washable

Lamps (not included)
incadescent lamp, max 60W

Electric
230V, 50Hz, flexible wiring, heat resistant up to +105 C

Jupiter 1

[mm]

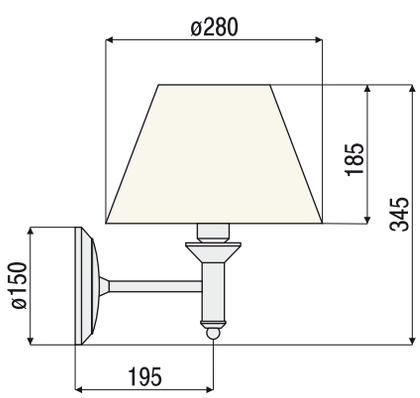

Jupiter 2

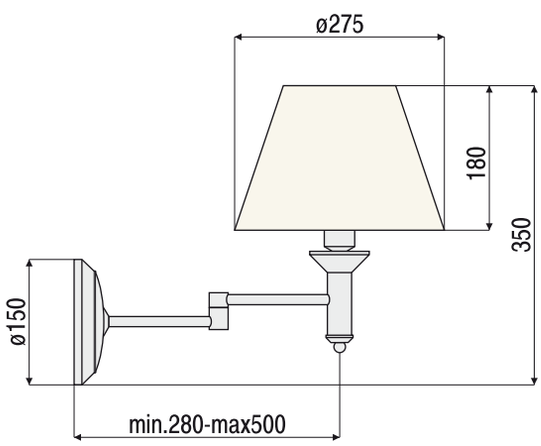

8.01

PolamRem

POLAM-REM S.A. 80-531 Gdańsk ul.Sucha 25
tel. +48(0-58) 520-74-00 fax +48(0-58) 343-26-29
www.polam-rem.com.pl; polamrem@polam-rem.com.pl

Technical modification reserved without prior notice

Jupiter

Table Light, max 60W

POLAM-REM S.A.

IP 20

Type	Code	Light source	Light source power / lamp base	Weight
Jupiter 3	206a CLL	incadescent lamp	max 60W / E 27	1,3 kg
Jupiter 4	206 CLL	incadescent lamp	max 60W / E27	1,5 kg

Approvals
according to the rules of relevant classification societies, additional IEC
Housing
brass polished

Shade
perlatex beige, washable
Lamps (not included)
incadescent lamp, max 60W

Electric
230V, 50Hz flexible wiring, heat resistant up to +105 C

8.02

[mm]

Jupiter 3

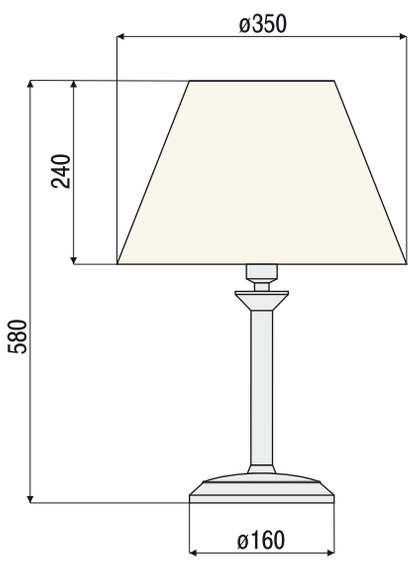

Jupiter 4

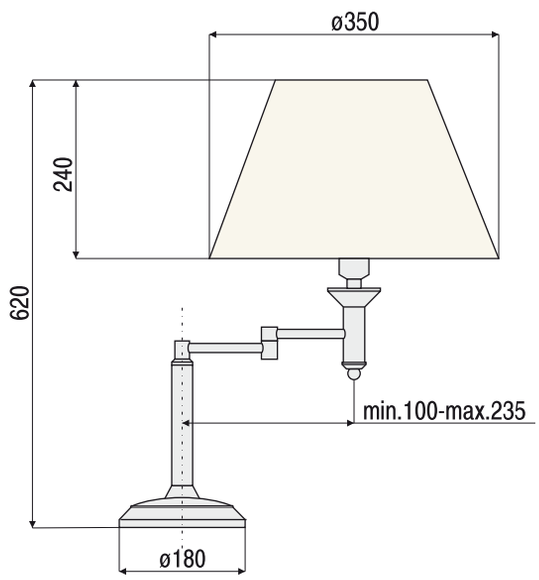

PolamRem
POLAM-REM S.A. 80-531 Gdańsk ul.Sucha 25
tel. +48(0-58) 520-74-00 fax +48(0-58) 343-26-29
www.polam-rem.com.pl; polamrem@polam-rem.com.pl

Technical modification reserved without prior notice

POLAM-REM S.A.

Wall Light, max 60W

Jupiter

IP 20

Type	Code	Light source	Light source power / lamp base	Weight
Jupiter 5	287 CLKM	incadescent lamp	max 60W / E 27	1,0 kg

Approvals
according to the rules of relevant classification societies, additional IEC
Housing
brass polished

Shade
perlatex beige, washable
Lamps (not included)
incadescent lamp, max 60W

Electric
230V, 50Hz, flexible wiring, heat resistant up to +105 C

8.03

[mm]

Jupiter 5

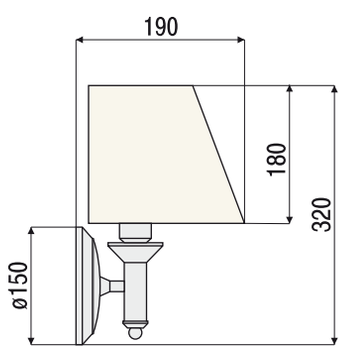

PolamRem
POLAM-REM S.A. 80-531 Gdańsk ul.Sucha 25
tel. +48(0-58) 520-74-00 fax +48(0-58) 343-26-29
www.polam-rem.com.pl; polamrem@polam-rem.com.pl

Technical modification reserved without prior notice

Jupiter

Table Light, max 60W

POLAM-REM S.A.

IP 20

Type	Code	Light source	Light source power / lamp base	Weight
Jupiter 7	288 CLN	incadescent lamp	max 60W / E 27	1,3 kg

Approvals
according to the rules of relevant classification societies, additional IEC
Housing
brass polished

Shade
perlatex beige, washable
Lamps (not included)
incadescent lamp, max 60W

Electric
230V, 50Hz flexible wiring, heat resistant up to +105 C

8.04

[mm]

Jupiter 7

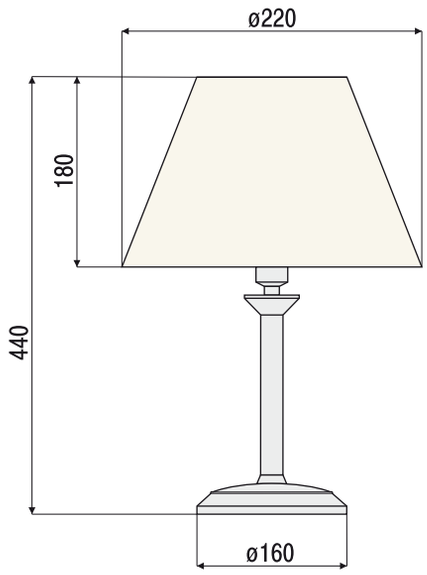

PolamRem
POLAM-REM S.A. 80-531 Gdańsk ul.Sucha 25
tel. +48(0-58) 520-74-00 fax +48(0-58) 343-26-29
www.polam-rem.com.pl; polamrem@polam-rem.com.pl

Technical modification reserved without prior notice

POLAM-REM S.A.

Wall Light, 2x10W/1x13W

WLP 60

IP 20

230V 50Hz

G24d-1

Type	Code	Light source	Light source power / lamp base	Weight
WLP 60 - 2100	660 - 210	tubular compact fluorescent lamp	2 x 10 W / G24d-1	0,8 kg
WLP 60 - 1130	660 - 113		1 x 13 W / G24d-1	0,9 kg

Approvals
according to the rules of relevant classification societies, additional IEC
Housing
zinc coated steel, powder coated white
Diffuser
polycarbonate, opal

Lamps (not included)
tubular compact fluorescent lamp 10W/13W
Electric
flexible wiring, heat resistant up to +105°C, switch 2-pole

Cable entry
2 inlet, cable ø max 11 mm
Mounting
4 mounting holes, ø 5 mm
Electrical connection
see finish section

8.05

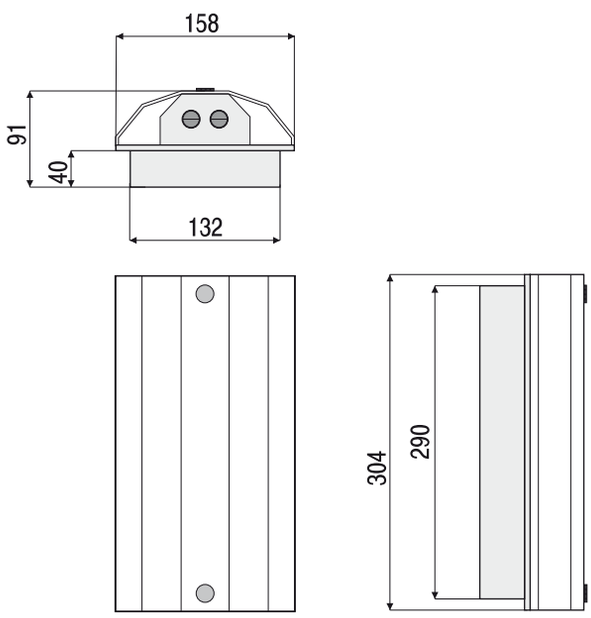

[mm]

OPTIONS

220V 60Hz | 230V 60Hz | 120V 60Hz

240V 50Hz | 24V DC

PolamRem

POLAM-REM S.A. 80-531 Gdańsk ul.Sucha 25
tel. +48(0-58) 520-74-00 fax +48(0-58) 343-26-29
www.polam-rem.com.pl; polamrem@polam-rem.com.pl

Technical modification reserved without prior notice

POLAM-REM S.A.

Order Specification

Type

WLP 60 - x x x x

2 x 10 W - **210**
1 x 13 W - **113**

230V/50Hz - **0** /standard/
220V/60Hz - **1**
120V/60Hz - **2**
240V/50Hz - **3**
24V DC - **4**
230V/60Hz - **5**

Example of type description

WLP 60 - 2100 light fitting for two tubular compact fluorescent lamps 10W with socket G24d-1; supply voltage 230V/50Hz;

PolamRem
POLAM-REM S.A. 80-531 Gdańsk ul.Sucha 25
tel. +48(0-58) 520-74-00 fax +48(0-58) 343-26-29
www.polam-rem.com.pl; polamrem@polam-rem.com.pl

Technical modification reserved without prior notice

Diagrams Electrical Connection for Wall Lights

connection for wall lighting

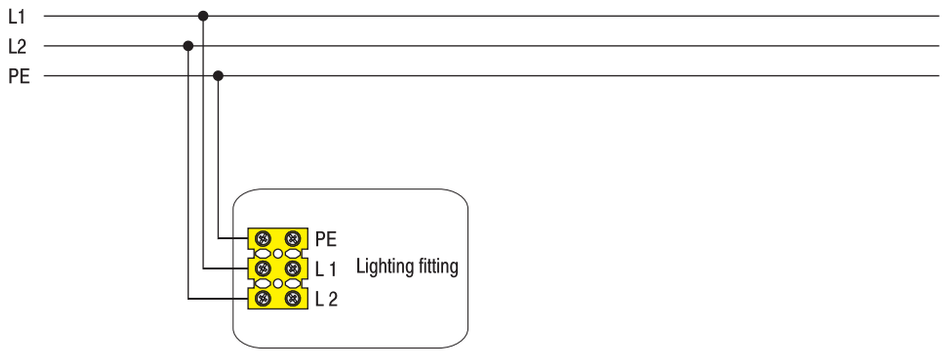

PolamRem
POLAM-REM S.A. 80-531 Gdańsk ul.Sucha 25
tel. +48(0-58) 520-74-00 fax +48(0-58) 343-26-29
www.polam-rem.com.pl; polamrem@polam-rem.com.pl

Technical modification reserved without prior notice

POLAM-REM S.A.

Outdoor Luminaires

SLP 97 9.01 - 9.02

SLP 98 9.03 - 9.04

Diagrams Electrical Connection 9.05

PolamRem

POLAM-REM S.A. 80-531 Gdańsk ul.Sucha 25
tel. +48(0-58) 520-74-00 fax +48(0-58) 343-26-29
www.polam-rem.com.pl; polamrem@polam-rem.com.pl

Technical modification reserved without prior notice

POLAM-REM S.A.

Outside Wall Light, Balcony, 1x18W/1x26W

SLP 97

IP 67

230V 50Hz

G24d-2

G24d-3

Type	Light source	Light source power / lamp base	Weight
SLP 97 - 1180	tubular compact fluorescent lamp	1 x 18 W / G24d-2	1,8 kg
SLP 97 - 1260		1 x 26 W / G24d-3	2,0 kg

Approvals
according to the rules of relevant classification societies, additional IEC
Housing
stainless steel, powder coated white
Diffuser
polycarbonate, opal

Lamps (not included)
tubular compact fluorescent lamp 18W/26W
Electric
flexible wiring
heat resistant up to +105°C

Cable entry
2 cable glands PG 13,5
cable max ø 12 mm
Mounting
4 mounting holes ø 6 mm
Electrical connection
see finish section

9.01

[mm]

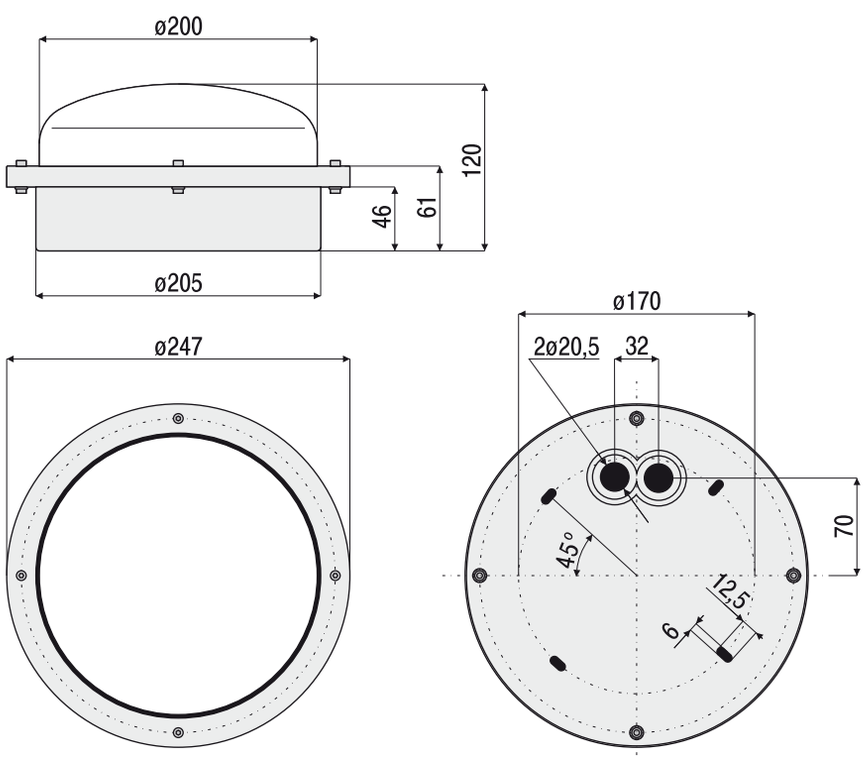

OPTIONS

220V 60Hz | 230V 60Hz | 120V 60Hz

240V 50Hz

Electronic Ballast	220V-240V 50Hz-60Hz	220V-240V DC

Emergency Lampholder B15d

PolamRem

POLAM-REM S.A. 80-531 Gdańsk ul.Sucha 25
tel. +48(0-58) 520-74-00 fax +48(0-58) 343-26-29
www.polam-rem.com.pl; polamrem@polam-rem.com.pl

Technical modification reserved without prior notice

POLAM-REM S.A.

Order Specification

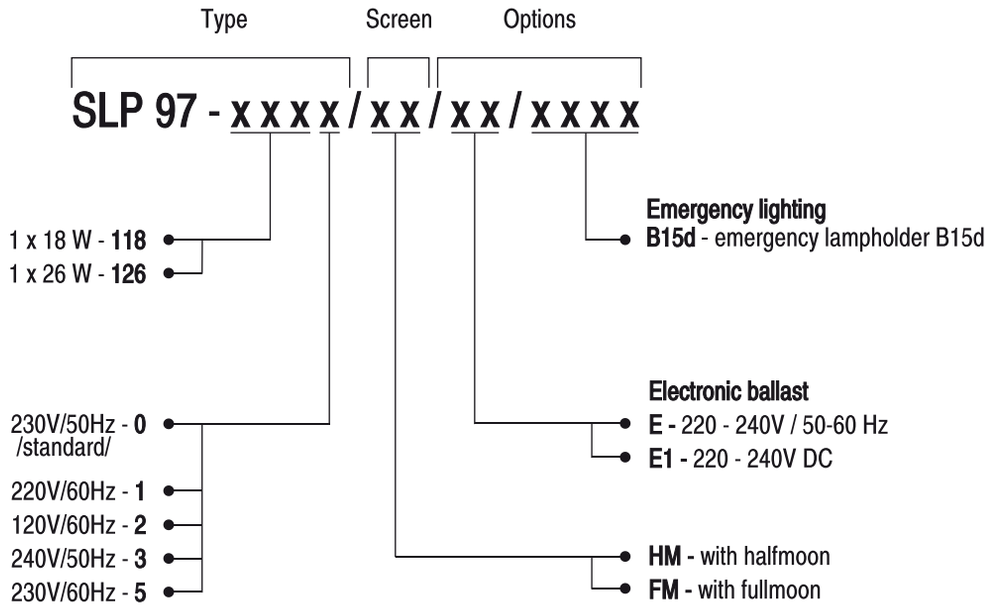

Example of type description

SLP 97 - 1180 light fitting for one tubular compact fluorescent lamp 18W with socket G24d-2; supply voltage 230V/50Hz

Spare parts for batten luminaire SLP 97 - 1180

No.	Spare parts	Part-no.
1	Diffuser PC, opal	101 00 97118
2	Lampholder G24d-2	011 00 97118
3	Ballast	031 00 97118
4	Capacitor	021 00 97118

PolamRem
POLAM-REM S.A. 80-531 Gdańsk ul.Sucha 25
tel. +48(0-58) 520-74-00 fax +48(0-58) 343-26-29
www.polam-rem.com.pl; polamrem@polam-rem.com.pl

Technical modification reserved without prior notice

POLAM-REM S.A.

Outside Wall Light, Balcony, 1x18W/1x26W

SLP 98

IP 67

230V 50Hz

G24d-2

G24d-3

Type	Light source	Light source power / lamp base	Weight
SLP 98 - 1180	tubular compact fluorescent lamp	1 x 18 W / G24d-2	1,8 kg
SLP 98 - 1260		1 x 26 W / G24d-3	2,0 kg

Approvals
according to the rules of relevant classification societies, additional IEC

Housing
stainless steel, powder coated white

Diffuser
polycarbonate, opal

Lamps (not included)
tubular compact fluorescent lamp 18W/26W

Electric
flexible wiring
heat resistant up to +105°C

Cable entry
2 cable glands PG 13,5
cable max ø 12 mm

Mounting
4 mounting holes ø 6 mm

Electrical connection
see finish section

9.03

[mm]

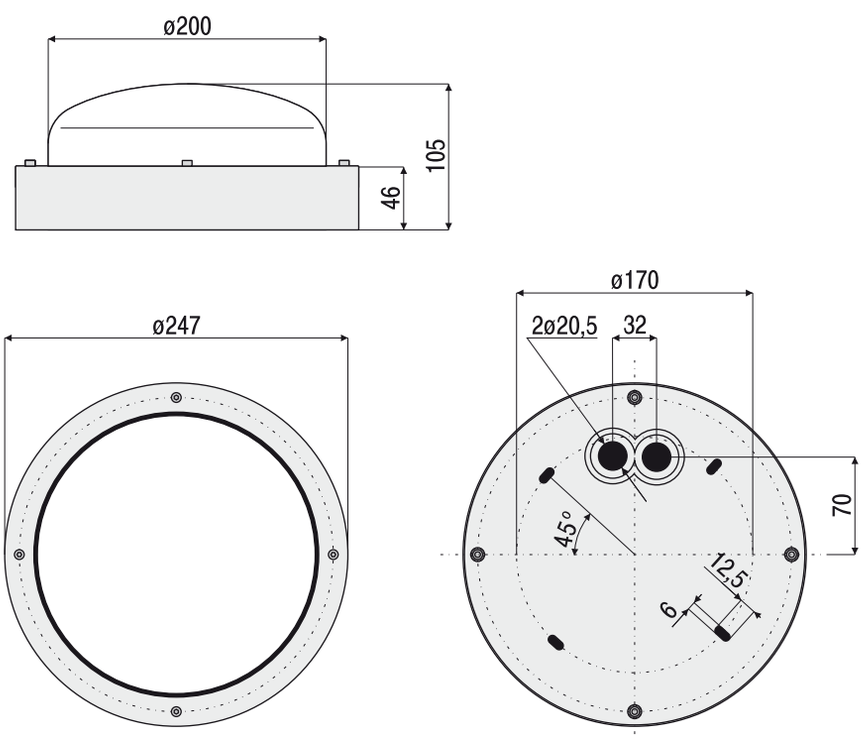

OPTIONS

220V 60Hz | 230V 60Hz | 120V 60Hz

240V 50Hz

Electronic Ballast	220V-240V 50Hz-60Hz	220V-240V DC

Emergency Lampholder B15d

PolamRem

POLAM-REM S.A. 80-531 Gdańsk ul.Sucha 25
tel. +48(0-58) 520-74-00 fax +48(0-58) 343-26-29
www.polam-rem.com.pl; polamrem@polam-rem.com.pl

Technical modification reserved without prior notice

POLAM-REM S.A.

Order Specification

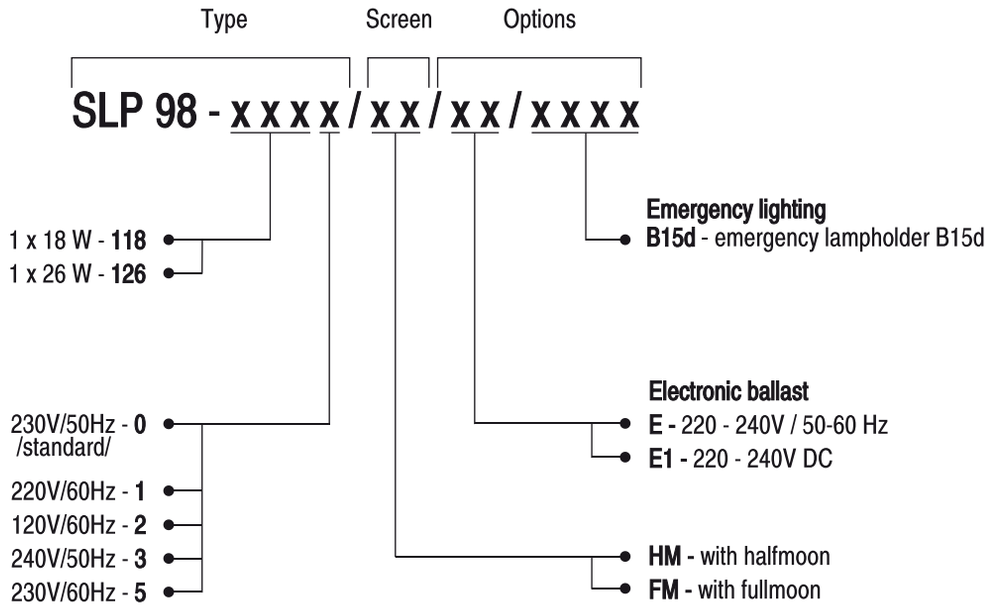

Example of type description

SLP 98 - 1180 light fitting for one tubular compact fluorescent lamp 18W with socket G24d-2; supply voltage 230V/50Hz

Spare parts for batten luminaire SLP 98 - 1180

No.	Spare parts	Part-no.
1	Diffuser PC, opal	101 00 98118
2	Lampholder G24d-2	011 00 98118
3	Ballast	031 00 98118
4	Capacitor	021 00 98118

PolamRem
POLAM-REM S.A. 80-531 Gdańsk ul.Sucha 25
tel. +48(0-58) 520-74-00 fax +48(0-58) 343-26-29
www.polam-rem.com.pl; polamrem@polam-rem.com.pl

Technical modification reserved without prior notice